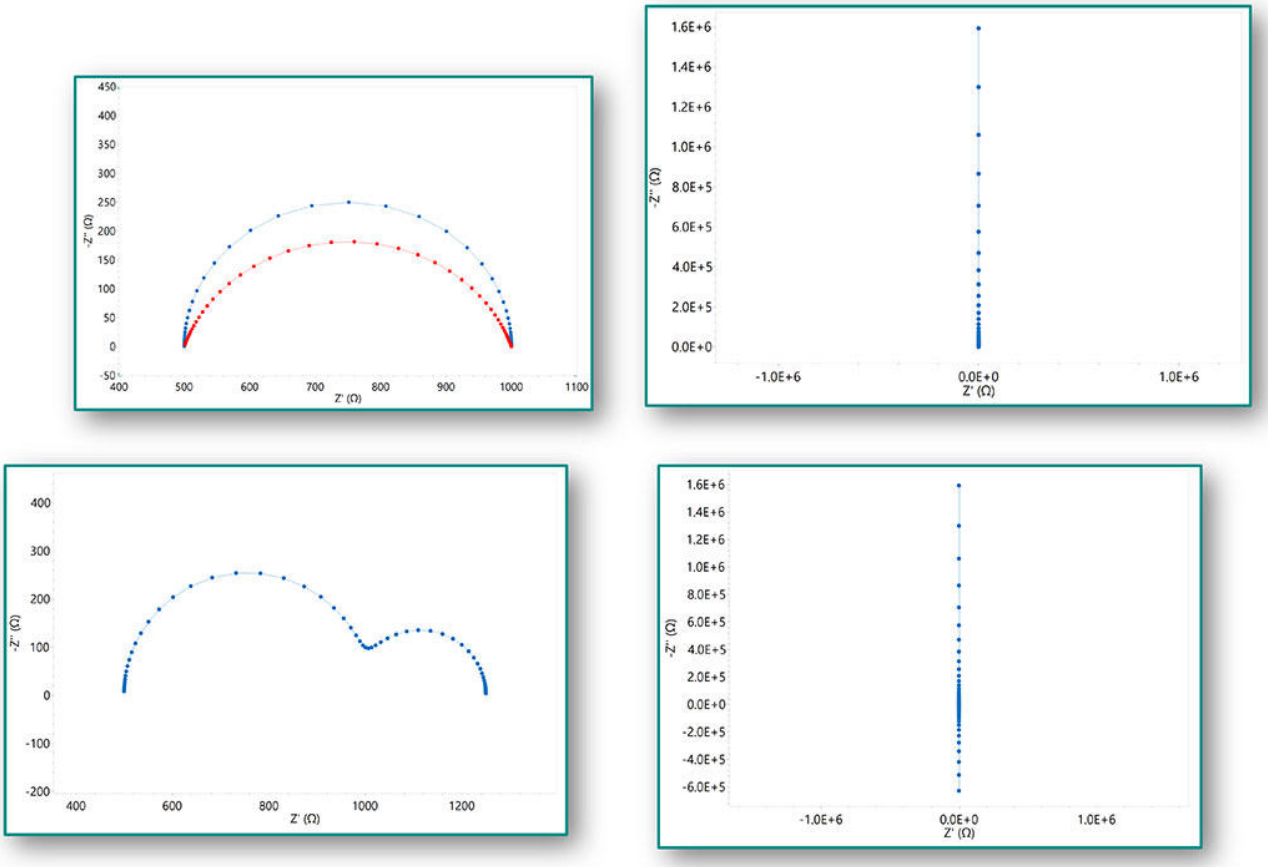

Application Note AN-EIS-003

Electrochemical Impedance Spectroscopy

Part 3 – Data Analysis

Characterization of electrochemical systems with electrochemical impedance spectroscopy (EIS) requires suitable models to help interpret the data. These models can be split into two broad categories: equivalent circuit models and process models. The models are regressed to experimental data to estimate parameters that can both describe the experimental data adequately and be used to predict the behavior of the system under various conditions.

This seven-part series introduces the concept and basics of EIS, along with experimental setups, common equivalent circuits used for fitting data, and tips for improving the quality of the measured data and fitting. This Application Note (part 3) introduces the most common circuit elements which may be assembled in different configurations to obtain equivalent circuits used for data analysis.

EQUIVALENT CIRCUIT MODELS

It is possible to represent complete electrochemical cells, as well as individual physical and chemical processes, as a collection of basic electrical elements such as resistors or capacitors. Collections of such elements can be combined in series and in parallel to build what is termed an equivalent circuit model.
Like each individual electrical element, each process in the electrochemical cell has a different frequency response, and thus a different impedance. These models are the most common way of interpreting the impedance data collected during a typical EIS measurement.
The following sections describe each element commonly used to build an equivalent circuit, together with examples of its real-world (electrochemical) equivalent.

RESISTOR, R

A resistor R has an impedance Z_R of:

$$Z_R\,(\Omega) = R$$

$$|Z_R|\,(\Omega) = R$$

$$\theta_R\,(^\circ) = 0$$

The impedance is independent of frequency and has no imaginary part. The current through a resistor is always in phase with the voltage, therefore no phase shift is present. In NOVA, the R element is represented by the symbol shown at the top center of Figure 1.

Some examples of the use of a resistor to describe electrochemical phenomena are ohmic resistance and polarization resistance. These are described in more detail in the next sections.

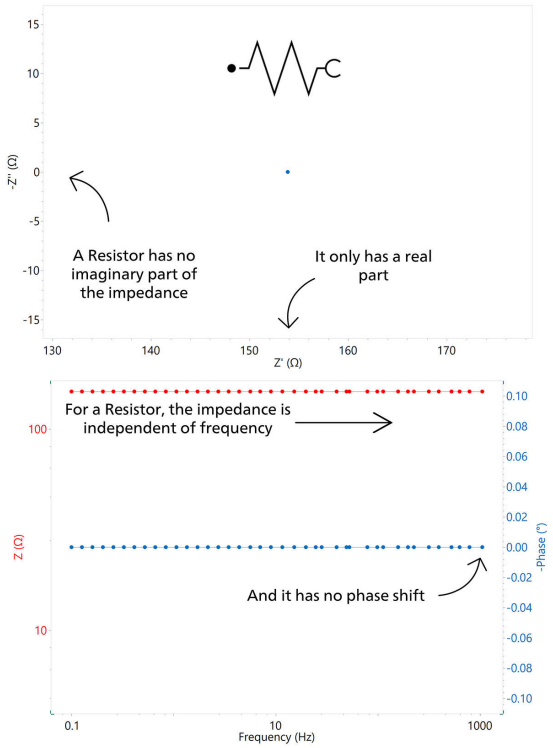

Figure 1. Nyquist (top) and Bode (bottom) plots for the resistor (R) element, and the associated symbol in NOVA (inlay at top center).

Ohmic Resistance, R_Ω

The potential drop between the reference electrode and the working electrode is the ohmic resistance (also known as uncompensated resistance), and can be modelled using R. The ohmic resistance depends on the conductivity of the electrolyte and the geometry of the electrode. For a rotating disc electrode, the ohmic resistance is given by the following equation:

$$R_\Omega = \frac{1}{4\kappa r}$$

where $_K$ (S cm^{-1}) is specific conductivity of the bulk electrolyte and r (cm) is the radius of the disc.

For more complex geometries, the ohmic resistance is determined experimentally and can be estimated by EIS. In a Nyquist plot, the intersection of the impedance data with the real part of the axis at the high frequency end gives the ohmic resistance.

Polarization Resistance, R_p

An electrode is polarized when its potential is forced away from its value at open circuit. Polarization of an electrode causes current to flow due to electrochemical reactions it induces at the electrode surface. The magnitude of the current is controlled by reaction kinetics and the diffusion of reactants both towards and away from the electrode.

For example, when an electrode undergoes uniform corrosion at open circuit, the open circuit potential (OCP) is controlled by the equilibrium between anodic and cathodic reactions resulting in anodic and cathodic currents. The OCP is the potential where the two currents are equal. The value of the current for either of the reactions is known as the corrosion current. When the two reactions are under kinetic control, the potential of the cell can be related to the current by the Butler-Volmer equation:

$$i = i_0\left(e^{2.303\frac{\eta}{\beta_a}} - e^{-2.303\frac{\eta}{\beta_c}}\right)$$

where i (A) is the measured cell current, i_0 (A) is the exchange current, 2.303 is the conversion between log_e and log_{10}, η (V) is the overpotential (defined as the difference between applied potential E and the corrosion potential E_{corr}), and β_a (V) and β_c (V) are the Tafel slopes of the anodic and cathodic branch, respectively.

For overpotential η, the above can be transformed to:

$$i_0 \approx \frac{1}{R_p}\left[\frac{\beta_a\beta_c}{2.303(\beta_a + \beta_c}\right]$$

The polarization resistance R_p behaves like a resistor. If the Tafel slopes are known, then i_0 can be calculated from R_p. The exchange current i_0 can then be used to calculate the corrosion rate (see AN-COR-002).

CAPACITOR, C

A capacitor C has an impedance of:

$$Z_c\,(\Omega) = -\frac{1}{j\omega C}$$

$$|Z_c|\,(\Omega) = \frac{1}{\omega C}$$

$$\theta_C\,(^\circ) = 90$$

---

where $j = \sqrt{-1}$, the angular frequency $\omega = 2\pi f$, and C (F) is the capacitance.

The impedance of capacitors is a function of frequency and has only an imaginary part. A capacitor's impedance decreases as the frequency is raised. The current through a capacitor is phase-shifted by 90° with respect to voltage. In NOVA, the C element is represented by the symbol in Figure 2.

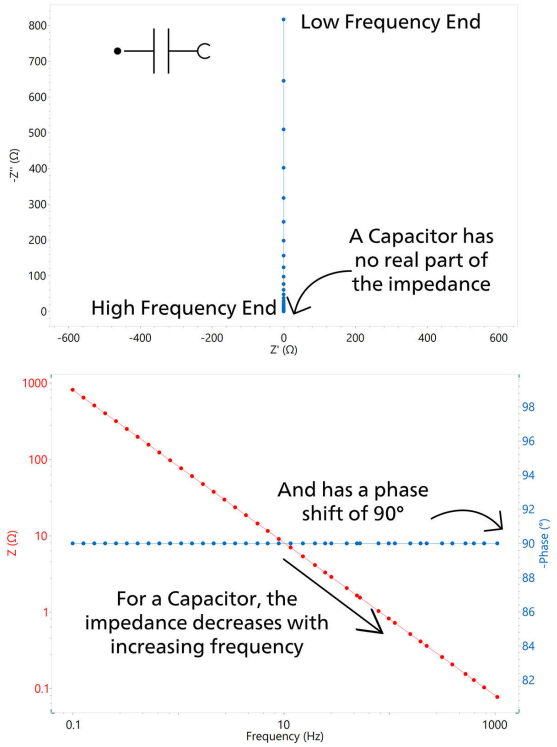

Figure 2. Nyquist (top) and Bode (bottom) plots for a capacitor (C), and the associated symbol in NOVA (inlay at top left corner).

Some examples of the use of the capacitor to describe electrochemical phenomena are provided below.

Double Layer Capacitance, C_{DL}

An electrical double layer exists at the electrode/electrolyte interface. This double layer is formed as ions from the solution approach the electrode surface. Charges in the electrode are separated from the charges of these ions. The separation is on the order of angstroms.

The value of the double layer capacitance depends on many variables including electrode potential, temperature, ionic concentrations, types of ions, oxide layers, electrode roughness, impurity adsorption, and more. For metal electrodes, typical values for the double layer capacitance are between 10–20 $\mu F\, cm^{-2}$.

Coating Capacitance, C_C

For polymer-coated substrates, the coating capacitance C_c is given by the equation:

$$C_c = \varepsilon_0 \varepsilon \frac{A}{d}$$

where ε_0 ($8.85E-12\ F\ m^{-1}$) is the vacuum permittivity, ε is the relative permittivity of the coating, A (m^2) is the area of the coating, and d (m) is the thickness of the coating.

Typical relative permittivity values of coatings range between 3 and 4, while the relative permittivity of water is around 80. When water penetrates the coating, its dielectric constant increases, resulting in an increased coating capacitance. Hence, C_c can be used to measure the amount of water absorbed by the coating. Therefore, EIS is a useful technique for monitoring changes in coatings.

INDUCTOR, L

The impedance of an inductor L is given by the equation:

$$Z_L\ (\Omega) = j\omega L$$

$$|Z_L|\ (\Omega) = \omega L$$

$$\theta_L\ (^\circ) = -90$$

---

where $j = \sqrt{-1}$, the angular frequency $\omega = 2\pi f$, and L *(H)* is the inductance.

The impedance of an inductor increases with frequency. Like capacitors, inductors have only an imaginary impedance component. However, current through an inductor is phase-shifted by -90° with respect to the voltage.

The impedance of an electrochemical cell can sometimes appear to be inductive due to the adsorption of reactants on the surface and can be modeled using inductance (usually at low frequencies).

Inductive behavior can also result from non-uniform current distribution, inductance of cell cables, slow response of reference electrodes, and potentiostat non-idealities. In these cases, the appearance of inductance at high frequencies can indicate an artifact, an error, or non-ideality in the EIS measurement. In NOVA, the L element is represented by the symbol shown in Figure 3.

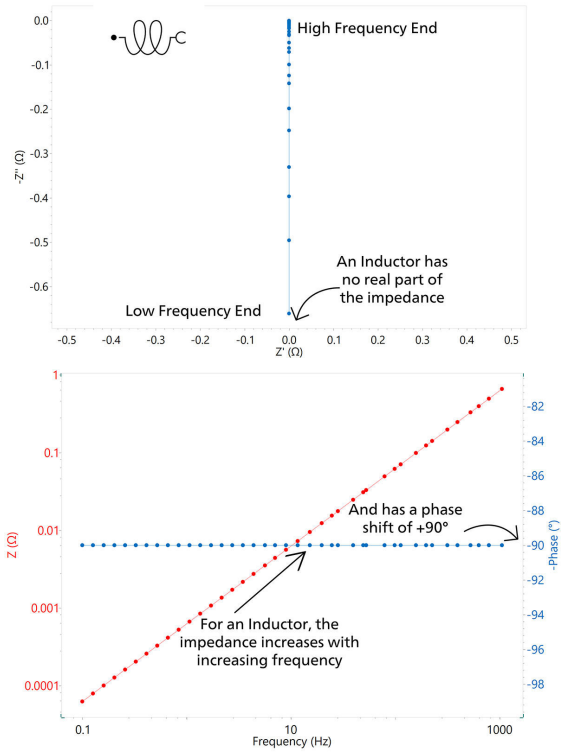

Figure 3. Nyquist (top) and Bode (bottom) plots for an inductor (L), and the associated symbol in NOVA (inlay at top left corner).

CONSTANT PHASE ELEMENT, Q (OR CPE)

Modelling an electrochemical phenomenon with an ideal capacitor assumes that the surface under investigation is homogeneous, which is normally not the case.

This lack of homogeneity is modelled with a Q element, used to represent the constant phase element (CPE):

$$Z_Q\,(\Omega) = \frac{1}{Y_0(j\omega)^n}$$

$$|Z_Q|\,(\Omega) = \frac{1}{Y_0\omega^n}$$

$$\theta_Q(°) = 90 - \alpha$$

where Y_0 ($S\ s^n$) is the parameter containing the capacitance information, $j = \sqrt{-1}$, ω (the angular frequency) is equal to $2\pi f$, n is an empirical constant ranging from 0 to 1 related to the deviation of the straight capacitive line from 90°, and α is the angle of deviation defined as α = 90° (1 – n).

It is noteworthy that when n = 1, the CPE behaves as a pure capacitor, while when n = 0, the CPE behaves as a pure resistor. Furthermore, when n = 0.5, the CPE is the equivalent of the so-called Warburg element, described in the following sections.

In NOVA, the Q element is represented by the symbol shown in Figure 4.

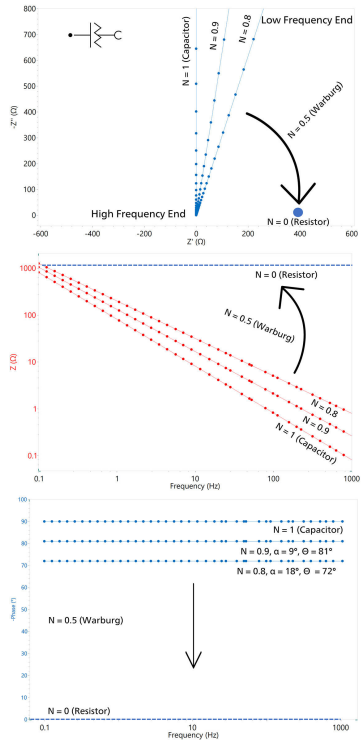

Figure 4. Nyquist (top) and Bode (bottom) plots for a constant phase element (CPE), and the associated symbol in NOVA (inlay at top left corner).

Note: In these equations (and in NOVA), the impedance is defined in terms of the admittance. While the impedance of a material is a measure of how much the AC current is impeded in a circuit, the admittance is a measure of how much current is admitted. Therefore, we can consider that admittance is the reciprocal (inverse) of impedance. In NOVA, the units of Y_0 are given as Mho.s^N. This is equivalent to saying ($S\ s^n$) as S (Siemens) = Mho.

Double layer capacitance and coating capacitance, described in the previous section, are usually modelled with a CPE.

MODELLING DIFFUSION IN ELECTROCHEMICAL SYSTEMS

In electrochemistry, the diffusion layer is the region near the surface of the electrode where the concentration of electroactive materials varies due to the diffusion of those materials to or from the electrode surface. It plays a role in nearly every electrochemical process. As such, more «traditional» electrochemical techniques such as cyclic voltammetry and chronoamperometry are often employed to study the kinetics of reactions and how the properties of the diffusion layer impact them. Therefore, in order to build an accurate model of the electrochemical interface it is important to independently model the diffusion process taking place. A number of circuit elements have been developed in order to do this, including the Warburg (W), Warburg short (O), Warburg open (T), and transmission line (also known as Bisquert, B2). The circumstances under which one element should be chosen over the other will be explained in the next sections.

Warburg, W: semi-infinite diffusion

The simplest (and most commonly used) element for modelling diffusion behavior, the Warburg element, describes what happens when linear diffusion to a large planar electrode takes place (e.g., what happens in a traditional three-electrode cell). Under this assumption of a semi-infinite linear diffusion layer, the impedance is defined as:

$$Z_w\,(\Omega) = \frac{1}{Y_0\sqrt{j\omega}} = \frac{\sqrt{2}}{Y_0\sqrt{\omega}} - j\,\frac{\sqrt{2}}{Y_0\sqrt{\omega}}$$

$$|Z_w|\,(\Omega) = \frac{2}{Y_0\sqrt{\omega}}$$

$$\theta_W\,(°) = 45$$

---

where $j = \sqrt{-1}$, ω (the angular frequency) is equal to $2\pi f$, and Y_0 ($F\ s^{-1/2}$) is a parameter containing information about the diffusion.

The reciprocal of this is known as the Warburg coefficient, usually noted with the σ symbol in scientific literature. When dealing with a (quasi)reversible redox system where both oxidized and reduced forms are soluble in solution, the Warburg coefficient is related to the diffusion of the dissolved forms by the equation:

$$\sigma = \frac{1}{Y_0} = \frac{RT}{AF^2n^2\sqrt{2}}\left(\frac{1}{C_O^b\sqrt{D_O}} + \frac{1}{C_R^b\sqrt{D_R}}\right)$$

$$= \frac{RT}{AF^2n^2\Theta C^b\sqrt{2D}}$$

where *R*, *T*, and *F* have their usual definitions, n is the number of electrons exchanged, *D* is the diffusion coefficient of the species (where the subscripts *O* and *R* stand for oxidized and reduced species, respectively), C^b is the concentration of the *O* and *R* species in the bulk, *A* is the surface area, and Θ denotes the fraction of the *O* and *R* species present. A Warburg impedance is characterized by having identical real and imaginary contributions, resulting in a phase angle of 45°. In NOVA, the Warburg element is represented by the symbol in Figure 5.

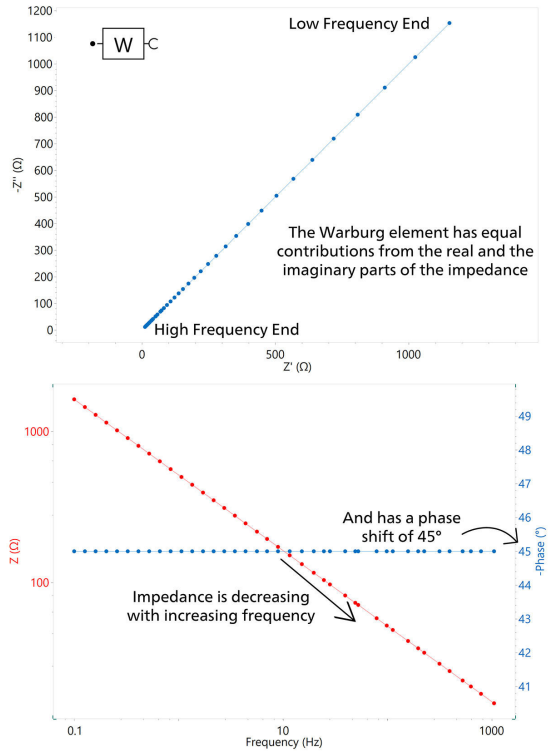

Figure 5. Nyquist (top) and Bode (bottom) plots for a Warburg element (W), and the associated symbol in NOVA (inlay at top left corner).

Warburg – short circuit terminus, O: finite diffusion

For reference, the Warburg short circuit terminus (simply referred to as «Warburg short») is also known in NOVA as cotangent hyperbolic. It is also known as FLW (finite length Warburg) or a transmissive finite diffusion element elsewhere in the scientific literature.

This element is most associated with diffusion through a layer of finite thickness that ends in a transmissive (permeable) boundary. Under the assumption of a finite diffusion layer thickness (Nernst hypothesis) with a short circuit terminus, the diffusion impedance is modelled by:

$$Z_0\,(\Omega) = \frac{1}{Y_0\sqrt{j\omega}}\coth(B\sqrt{j\omega})$$

Where, Y_0 ($S\ \sqrt{s}$) is the parameter containing information about the diffusion, $j = \sqrt{-1}$, ω (the angular frequency) is equal to $2\pi f$, and B ($\sqrt{s}$) is given by the equation:

$$B = \frac{\delta}{\sqrt{D}}$$

---

where δ (cm) is the diffusion layer thickness and D ($cm^2\ s^{-1}$) is the diffusion coefficient. It is noteworthy to point out that when B is large, Z_0 is reduced to Z_W.

A classic real-world example of when to use the Warburg short element is to describe diffusion to a rotating disc electrode, where through forced convection, the diffusion layer has a finite thickness given by:

$$\delta = \frac{1.61 \, . D^{1/3} \upsilon^{1/6}}{\sqrt{\omega_{RDE}}}$$

where D ($cm^2\ s^{-1}$) is the diffusion coefficient, υ ($cm^2\ s^{-1}$) is the kinematic viscosity of the solution, and ω_{RDE} ($rad\ s^{-1}$) is the angular frequency of the rotating disc electrode. In NOVA, the Warburg short circuit terminus element is represented by the symbol in Figure 6.

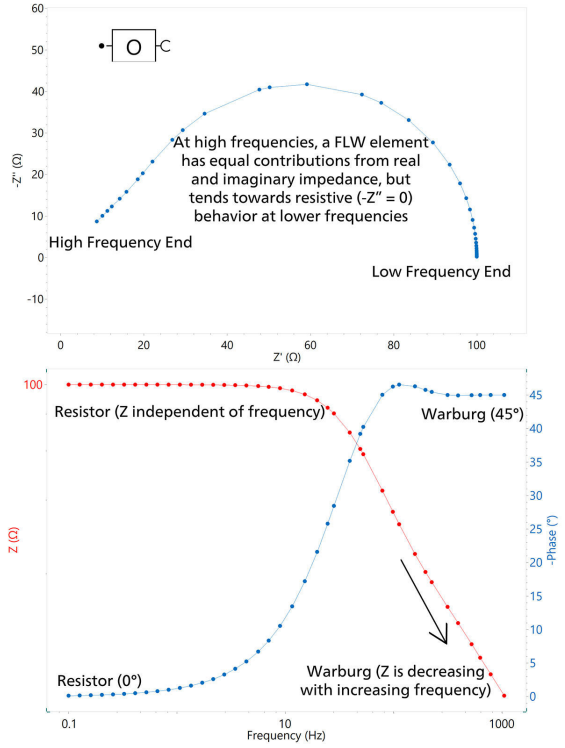

Figure 6. Nyquist (top) and Bode (bottom) plots for a finite length Warburg element (O), and the associated symbol in NOVA (inlay at top left corner).

As shown in the Nyquist plot in Figure 6, at high frequencies the Warburg short element behaves as a typical Warburg element with a phase angle of 45°. At lower frequencies, the Warburg short behaves more as a resistor with the impedance tending towards the Z' axis, producing a semicircle in the low frequency region. This is reflected in the Bode plot, which at low frequencies (around 10 Hz), shows the impedance becoming independent of frequency (typical behavior for a resistor). At higher frequencies however, the impedance is more like the that of a capacitor, as impedance begins to decrease with increasing frequency. While the Bode plot shows that at low frequencies the impedance (which behaves mainly as a resistor) becomes independent of frequency, and at higher frequencies takes on a more capacitive character, the impedance begins to decrease with increasing frequency. The phase angle is 0° at low frequencies (R) and 45° at high frequencies (W).

Warburg – open circuit terminus, T: finite diffusion

For reference, the Warburg open circuit terminus (simply referred to as «Warburg open») is also known in NOVA as tangent hyperbolic. Elsewhere in the scientific literature it is known as a FSW (finite space Warburg), or a reflective finite diffusion element.

This element is most associated with diffusion through a layer of finite thickness that ends in a reflective (impermeable) boundary. Under the assumption of a finite diffusion layer thickness (Nernst hypothesis) with an open circuit terminus, the diffusion impedance is modelled by:

$$Z_0\,(\Omega) = \frac{1}{Y_0\sqrt{j\omega}}\tanh(B\sqrt{j\omega})$$

where Y_0 ($S\ \sqrt{s}$) is the parameter containing information about the diffusion, $j = \sqrt{-1}$, the angular frequency $\omega = 2\pi f$, and B ($\sqrt{s}$) is given by:

$$B = \frac{\delta}{\sqrt{D}}$$

where δ (*cm*) is the diffusion layer thickness and D ($cm^2\ s^{-1}$) is the diffusion coefficient.

For a real-world example, the Warburg open element should be used to model the finite diffusion of species across a thin film (e.g., across a conductive polymer deposited onto a metallic surface), porous electrodes (e.g., the Bisquert, B2 element), or the diffusion of ions within a storage electrode such as in lithium-ion batteries.

In NOVA, the Warburg open circuit terminus element is represented by the symbol in Figure 7. Like the Warburg short element, at high frequencies the Warburg open behaves as a traditional Warburg element with a phase angle of 45°. At lower frequencies, the element tends toward more capacitive behavior with only an imaginary contribution (Figure 7). The Bode plot shows the impedance decreasing as the frequency increases, and the phase angle is 45° at high frequencies where the W component dominates. It begins to rise once the low frequency region is reached and the capacitive behavior takes over.

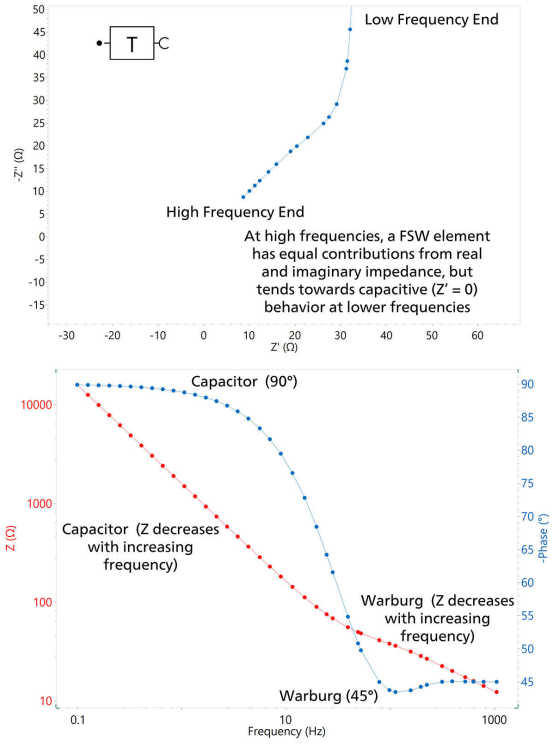

Figure 7. Nyquist (top) and Bode (bottom) plots for a finite space Warburg element (T), and the associated symbol in NOVA (inlay at top left corner).

OTHER ELEMENTS

Gerischer, G

If a first-order chemical reaction precedes the electrochemical reaction under investigation, then the so-called chemical-electrochemical or CE mechanism—the Gerischer element—can be used. The impedance of a Gerischer element is given by:

$$Z_G = \frac{1}{Y_0\sqrt{K_a + j\omega}}$$

where Y_0 ($S\ \sqrt{s}$) is the parameter containing information about the diffusion (and has the same definition as Y_0 in the Warburg coefficient), K_a (s^{-1}) is the reaction rate of the first-order chemical reaction, $j = \sqrt{-1}$, and the angular frequency $\omega = 2\pi f$. In NOVA, the Gerischer element is represented by the symbol in Figure 8.

The Nyquist and Bode plots for a Gerischer element appear very similar to those of an FLW element (see Figure 6) as they share some common characteristics in terms of their impedance behavior. At high frequencies the elements behave identically (and are thus indistinguishable from one another). However, if one were to chart both elements on the same Nyquist plot, some differences can be noted in the low frequency region – namely that generally the semicircle will have a smaller diameter for a G element compared to an FLW. It is also possible for a second semicircle to appear in a G element; this is not usually the case for FLW.

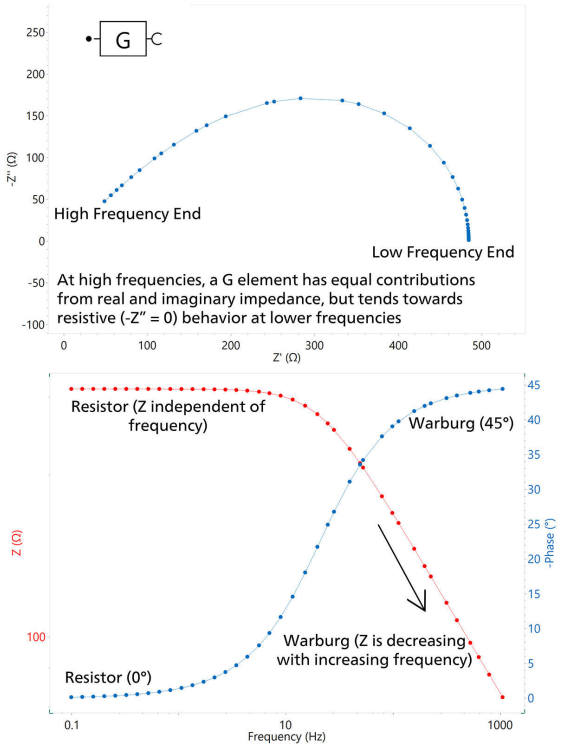

Figure 8. Nyquist (top) and Bode (bottom) plots for a Gerischer element (G), and the associated symbol in NOVA (inlay at top left corner).

Note: Obtaining the effective capacitance from CPE values

As shown before, the constant phase element (CPE) does not give the capacitance value, but rather a parameter Y_0 ($S\ s^n$) which contains the capacitance information. In order to extract the capacitance value, the following three cases are listed, depending on the placement of the CPE in an equivalent circuit.

The first case is that of a CPE placed in parallel with a resistor, R_pCPE (Figure 9). This type of circuit is also known as a Voigt-type circuit.

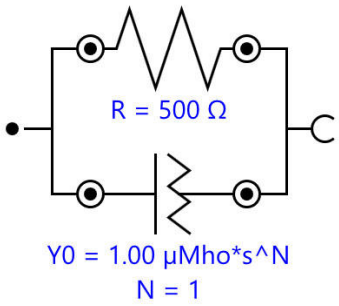

Figure 9. Equivalent circuit with a CPE in parallel with a resistor.

In this situation, the effective capacitance can be calculated using the following equation:

$$C_{eff}\,(F) = Y_0 \cdot (\omega_{max})^{n-1}$$

where ω_{max} is the angular frequency where the imaginary part of the impedance reaches its maximum value (i.e., the top of the semicircle).

In the case of a CPE in series with a resistor R_s, R_sCPE, see Figure 10.

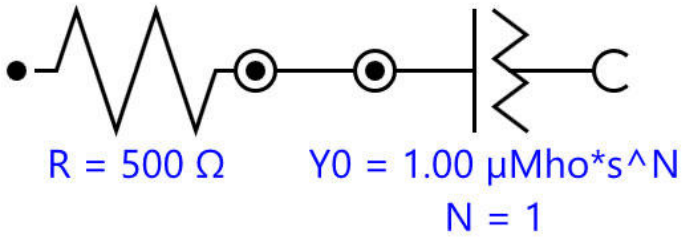

Figure 10. Equivalent circuit with a CPE in series with a resistor.

Here, the effective capacitance can be calculated with the following equation:

$$C_{eff}\,(F) = Y_0^{\frac{1}{n}} \cdot \left(\frac{1}{R_s}\right)^{\frac{n-1}{n}}$$

The final case described here is known as the Randles circuit, also known by the shorthand $R_s(R_pCPE)$. Therefore, the following equation should be used when a CPE is placed in parallel with a resistor R_p and this whole arrangement is also in series with a resistor R_s (see Figure 11).

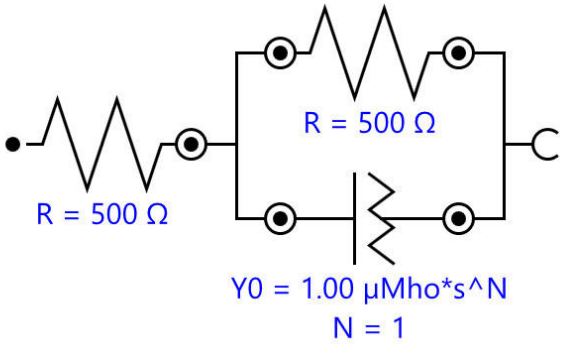

Figure 11. Equivalent circuit with a CPE in parallel with a resistor, and this is in series with another resistor.

In this final case, the effective capacitance C_{eff} can be calculated as follows:

$$C_{eff}\,(F) = Y_0^{\frac{1}{n}}.\left(\frac{1}{R_s} + \frac{1}{R_p}\right)^{\frac{n-1}{n}}$$

CONCLUSION

In this Application Note, insights about the various electrical elements used to build up equivalent circuits are given. Moreover, the properties of the elements are listed, together with examples of utilization. Finally, formulas to extract the effective capacitance from the CPE values are given.

CONTACT

Metrohm AG
Ionenstrasse
9100 Herisau
info@metrohm.com

CONFIGURATION



Advanced software for electrochemical research

NOVA is the package designed to control all the Autolab instruments with USB interface.

Designed by electrochemists for electrochemists and integrating over two decades of user experience and the latest .NET software technology, NOVA brings more power and more flexibility to your Autolab potentiostat/galvanostat.

NOVA offers the following unique features:

- Powerful and flexible procedure editor
- Clear overview of relevant real-time data
- Powerful data analysis and plotting tools
- Integrated control for external devices like Metrohm Liquid Handling devices

Download the latest version of NOVA