920 Absorber Module

Manual

8.920.8004EN / v6 / 2023-12-31

Metrohm

Metrohm AG
CH-9100 Herisau
Switzerland
+41 71 353 85 85
info@metrohm.com
www.metrohm.com

920 Absorber Module

2.920.0010

Manual

8.920.8004EN / v6 / 2023-12-31

Technical Communication
Metrohm AG
CH-9100 Herisau

This documentation is protected by copyright. All rights reserved.

This documentation has been prepared with great care. However, errors can never be entirely ruled out. Please send comments regarding possible errors to the address above.

Disclaimer

Deficiencies arising from circumstances that are not the responsibility of Metrohm, such as improper storage or improper use, etc., are expressly excluded from the warranty. Unauthorized modifications to the product (e.g. conversions or attachments) exclude any liability on the part of the manufacturer for resulting damage and its consequences. Instructions and notes in the Metrohm product documentation must be strictly followed. Otherwise, Metrohm's liability is excluded.

Table of contents

1 Introduction 1

1.1 Instrument description 1

1.2 Intended use 2

1.3 About the documentation 2
1.3.1 Content and scope 2
1.3.2 Symbols and conventions 3

1.4 Safety instructions 4
1.4.1 General notes on safety 4
1.4.2 Electrical safety 4
1.4.3 Tubing and capillary connections 5
1.4.4 Flammable solvents and chemicals 5
1.4.5 Recycling and disposal 6

2 The Combustion IC system 7

2.1 Overview 7

2.2 System description 8

2.3 Sequence of a determination 8

3 Overview of the instrument 10

3.1 Front 10

3.2 Rear 14

4 Installation 16

4.1 Setting up the instrument 16
4.1.1 Packaging 16
4.1.2 Checks 16
4.1.3 Location 16

4.2 Overview 16

4.3 Dosino for ultrapure water 19
4.3.1 Assembling the Dosino 22
4.3.2 Feeding the capillary into the instrument for Combustion Module (AJ) 23
4.3.3 Feeding the capillary into the instrument for Combustion Oven (TEI) 24
4.3.4 Connecting the ports – Overview 25
4.3.5 Inserting the Dosino in the instrument 33
4.3.6 Connecting the Metrosep I Trap 1 34
4.3.7 Connecting the ultrapure water bottle 37

4.4 Dosino for the absorber solution 39
4.4.1 Assembling the Dosino 40

4.4.2 Connecting the ports – Overview ... 41
4.4.3 Inserting the Dosino in the instrument ... 46
4.4.4 Connecting the T connector ... 47
4.4.5 Connecting the Metrosep A Trap 1 ... 49
4.4.6 Connecting the bottle with the absorber solution ... 53

4.5 10-port-valve ... 55
4.5.1 Connecting the ports ... 56
4.5.2 Connecting the bottle with the standard solution ... 59
4.5.3 Connecting the bottle with the check standard ... 60
4.5.4 Function of the 10-port valve ... 61

4.6 6-port valve ... 62
4.6.1 Connecting the ports ... 63
4.6.2 Mode of operation of the 6-port valve ... 66

4.7 Absorber tube ... 68

4.8 Connecting the drainage tubing and leak sensor ... 72
4.8.1 Installing the drainage tubing ... 72
4.8.2 Connecting the leak sensor ... 73

4.9 Connecting the instrument to a computer ... 74

4.10 Connecting the instrument to the power grid ... 75

4.11 Connecting the 920 Absorber Module to the remaining components ... 76
4.11.1 Connecting the Combustion Module (AJ) inlet: water infeed ... 76
4.11.2 Connecting the Combustion Module (AJ) outlet: absorber solution ... 79
4.11.3 Connecting the Combustion Oven (TEI) inlet ... 81
4.11.4 Connecting the Combustion Oven (TEI) outlet ... 82
4.11.5 Connecting the 930 Compact IC Flex ... 82

5 Start-up 85

6 Operation and maintenance 88

6.1 General ... 88

6.2 Door ... 88

6.3 Dosino ... 88

6.4 Dosing unit ... 88

6.5 Metrosep I Trap 1 ... 89

6.6 Metrosep A Trap 1 ... 89

6.7 10-port valve ... 89

6.8 6-port valve ... 89

6.9 Absorber tube ... 89

7 Troubleshooting 92
7.1 Problems and their solutions 92
7.2 Problems with the Dosino 92
7.3 Problems with the dosing units 92
8 Accessories 93
9 Technical specifications 94
9.1 Reference conditions 94
9.2 Ambient conditions 94
9.3 Housing 94
9.4 Dosino 95
9.5 10-port valve 95
9.6 6-port valve 95
9.7 Absorber tube 96
9.8 Leak sensor 96
9.9 Energy supply 96
9.10 Interfaces 96
Index 97

Table of figures

Figure 1 Detectable elements 7
Figure 2 Overview – CIC system 8
Figure 3 Sequence of the determination 9
Figure 4 920 Absorber Module – Front 10
Figure 5 920 Absorber Module – Front 12
Figure 6 920 Absorber Module – Rear 14
Figure 7 Capillaries and tubings in use – Overview 17
Figure 8 Installing the Dosino for ultrapure water 20
Figure 9 Connect the Dosino for ultrapure water 26
Figure 10 Installing the Dosino for the absorber solution 39
Figure 11 Connect the Dosino for the absorber solution 42
Figure 12 Feeding the capillary for the absorber solution into the instrument .. 50
Figure 13 Connecting the 10-port valve 55
Figure 14 Connecting the 10-port valve 57
Figure 15 10-port valve – Ports 61
Figure 16 10-port valve – Normal valve switchover and with a secured port 62
Figure 17 Connecting the 6-port valve 63
Figure 18 Connecting the 6-port valve 65
Figure 19 6-port valve – Ports 66
Figure 20 6-port valve – Valve positions 67
Figure 21 Connect the absorber tube 68
Figure 22 Combustion tube – Inlet 78
Figure 23 Combustion tube – Outlet 79
Figure 24 Combustion tube – Inlet 81
Figure 25 Combustion Oven (TEI) – Outlet 82

1 Introduction

1.1 Instrument description

The 920 Absorber Module forms part of the Combustion-IC-System, which includes a Combustion Module (AJ) / Combustion Oven (TEI) and an ion chromatograph in addition to the 920 Absorber Module. The Combustion-IC-System can be used for digesting solid, liquid and gaseous combustible samples. The Combustion-IC-System's prime application is the determination of halogenides and sulfur.

The 920 Absorber Module is the connecting link between combustion and IC analysis in the Combustion-IC-System. The 920 Absorber Module absorbs the combustion gases in an aqueous medium and transfers it into the ion chromatography system. The 920 Absorber Module performs the necessary Liquid Handling and enables the application of various sample preparation techniques, such as matrix elimination, preconcentration and automated calibration.

The 920 Absorber Module is comprised of the following modules:

Dosino for ultrapure water

A Dosino with a 5 mL dosing unit is inserted in the back in the 920 Absorber Module. This Dosino serves to dose water for the water infeed during combustion and for the transfer of the absorption solution to the IC instrument. Furthermore, it is used for liquid handling.

Dosino for the absorber solution

A Dosino with a 10 mL dosing unit is inserted in the front of the 920 Absorber Module. This Dosino serves to dose the absorber solution into the absorber tube.

10-port valve

The 10-port valve is the centerpiece of the Liquid Handling; it serves as a switch-over point between the various liquid flows.

6-port valve

The 6-port valve serves as a switch-over point between the two liquid flows. The sample loop allows a precisely defined sample amount to be measured before it is transferred to the analyzer.

Absorber tube

The combustion gases are absorbed by a solution in the absorber tube.

Leak sensor

The leak sensor detects leaking liquid that collects in the instrument's base tray. Liquid that leaks in the instrument is routed to the base tray using drainage tubing and detected there.

1.2 Intended use

The 920 Absorber Module represents the connecting link between combustion and IC analysis in a Combustion-IC-System. It absorbs the combustion gases in an absorber solution and transfers the resulting sample to an ion chromatograph. Furthermore, the 920 Absorber Module allows additional sample preparation techniques to be applied.

This instrument is suitable for processing chemicals and flammable samples. Therefore, the use of the 920 Absorber Module requires the user to have basic knowledge and experience in handling toxic and caustic substances. Knowledge regarding the application of fire prevention measures prescribed for laboratories is also mandatory.

1.3 About the documentation

CAUTION

Please read through this documentation carefully before putting the instrument into operation. The documentation contains information and warnings which the user must follow in order to ensure safe operation of the instrument.

1.3.1 Content and scope

This manual focuses on the 920 Absorber Module instrument, which forms part of the Combustion-IC-System.

Separate manuals exist for the other modules of the Combustion-IC-System:

- Manuals for the Combustion Module including Auto Boat Drive (ABD) and optional autosampler (MMS 5000) from Analytik Jena (PDFs available on the enclosed CD)
- Manuals for the Combustion Oven and the optional samplers Liquid Autosampler CIC, Solid Autosampler CIC or GLS Sampler CIC from Trace Elemental Instruments (PDFs available on the enclosed USB flash drive)
- Manual for 930 Compact IC Flex
- Manual for 800 Dosino
- Manual for 807 Dosing Unit

1.3.2 Symbols and conventions

The following symbols and formatting may appear in this documentation:

*(5-**12**)*	**Cross-reference to figure legend** The first number refers to the figure number, the second to the instrument part in the figure.
1	**Instruction step** Perform the steps one after the other.
Method	**Dialog text**, **parameter** in the software
File ▶ New	Menu or menu item
[Continue]	**Button** or **key**
	WARNING This symbol draws attention to a possible life-threatening hazard or risk of injury.
	WARNING This symbol draws attention to a possible hazard due to electrical current.
	WARNING This symbol draws attention to a possible hazard due to heat or hot instrument parts.
	WARNING This symbol draws attention to a possible biological hazard.
	CAUTION This symbol draws attention to possible damage to instruments or instrument parts.
	NOTE This symbol highlights additional information and tips.

1.4 Safety instructions

1.4.1 General notes on safety

WARNING

Operate this instrument only according to the information contained in this documentation.

This instrument left the factory in a flawless state in terms of technical safety. To maintain this state and ensure non-hazardous operation of the instrument, the following instructions must be observed carefully.

1.4.2 Electrical safety

The electrical safety when working with the instrument is ensured as part of the international standard IEC 61010.

WARNING

Only personnel qualified by Metrohm are authorized to carry out service work on electronic components.

WARNING

Never open the housing of the instrument. The instrument could be damaged by this. There is also a risk of serious injury if live components are touched.

There are no parts inside the housing which can be serviced or replaced by the user.

Supply voltage

WARNING

An incorrect supply voltage can damage the instrument.

Only operate this instrument with a supply voltage specified for it (see rear panel of the instrument).

Protection against electrostatic charges

WARNING

Electronic components are sensitive to electrostatic charges and can be destroyed by discharges.

Do not fail to pull the power cord out of the power socket before you set up or disconnect electrical plug connections at the rear of the instrument.

The device is to be operated only with the door closed.

1.4.3 Tubing and capillary connections

CAUTION

Leaks in tubing and capillary connections are a safety risk. Tighten all connections well by hand. Avoid applying excessive force to tubing connections. Damaged tubing ends lead to leakage. Appropriate tools can be used to loosen connections.

Check the connections regularly for leakage. If the instrument is used mainly in unattended operation, then weekly inspections are mandatory.

1.4.4 Flammable solvents and chemicals

WARNING

All relevant safety measures are to be observed when working with flammable solvents and chemicals.

- Set up the instrument in a well-ventilated location (e.g. fume cupboard).
- Keep all sources of flame far from the workplace.
- Clean up spilled liquids and solids immediately.
- Follow the safety instructions of the chemical manufacturer.

1.4.5 Recycling and disposal

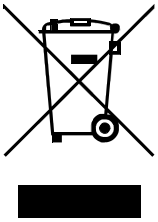

Properly dispose of chemicals and of the product to reduce negative effects on the environment and public health. Local authorities, waste disposal companies or dealers provide more detailed information on disposal. Observe the WEEE EU directive (WEEE = Waste Electrical and Electronic Equipment) for the proper disposal of waste electronic equipment within the European Union.

2 The Combustion IC system

2.1 Overview

Combustion is a sample preparation technique that uses burning to digest a sample. Solid, liquid and gaseous samples that are flammable can be digested using combustion. Combustion IC is particularly suited for determining the following elements:

	1	2	13	14	15	16	17	18
	Ia							VIIIa
1 (K)	001 H 1.00794	IIa	IIIa	IVa	Va	VIa	VIIa	002 He 4.002602
2 (L)	003 Li 6.941	004 Be 9.012182	005 B 10.811	006 C 12.0107	007 N 14.00674	008 O 15.9994	009 F 18.998403	010 Ne 20.1797
3 (M)	011 Na 22.98977	012 Mg 24.305	013 Al 26.981538	014 Si 28.0855	015 P 30.973761	016 S 32.066	017 Cl 35.4527	018 Ar 39.948
4 (N)	019 K 39.0983	020 Ca 40.078	031 Ga 69.723	032 Ge 72.61	033 As 74.9216	034 Se 78.96	035 Br 79.904	036 Kr 83.8
5 (O)	037 Rb 85.4678	038 Sr 87.62	049 In 114.818	050 Sn 118.71	051 Sb 121.76	052 Te 127.6	053 I 126.90447	054 Xe 131.29
6 (P)	055 Cs 132.90545	056 Ba 137.327	081 Tl 204.3833	082 Pb 207.2	083 Bi 208.98038	084 Po [209]	085 At [210]	086 Rn [222]
7 (Q)	087 Fr [223]	088 Ra [226]	113 Uut [287]	114 Uuq [289]	115 Uup [288]	116 Uuh [292]	117 Uus	118 Uuo

Figure 1 Detectable elements

An additional instrument is required for the determination of gaseous samples: the LPG/GSS Module (AJ) (2.136.0720) or the GLS Sampler CIC (TEI) (2.0136.0630).

2.2 System description

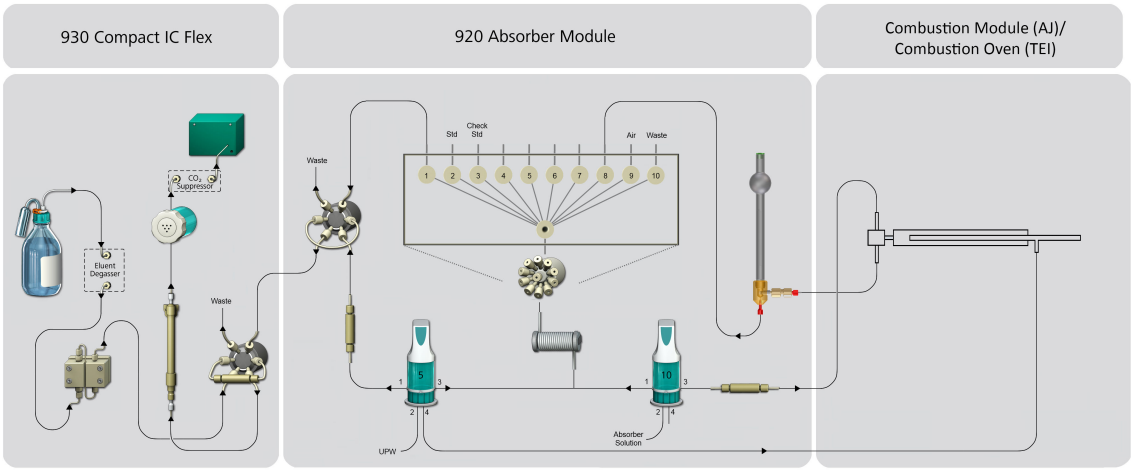

Figure 2 Overview – CIC system

The sample is combusted in the Combustion Module (AJ) / Combustion Oven (TEI).

The gases generated during combustion are dissolved into an absorber solution in the 920 Absorber Module and are optimized for analysis using suitable sample preparation techniques.

In the end, the absorption solution is preconcentrated in an ion chromatograph and analyzed.

The entire process is controlled and monitored using MagIC Net software. The analysis data is saved in the software's database.

2.3 Sequence of a determination

A determination in the Combustion IC system runs according to the following diagram:

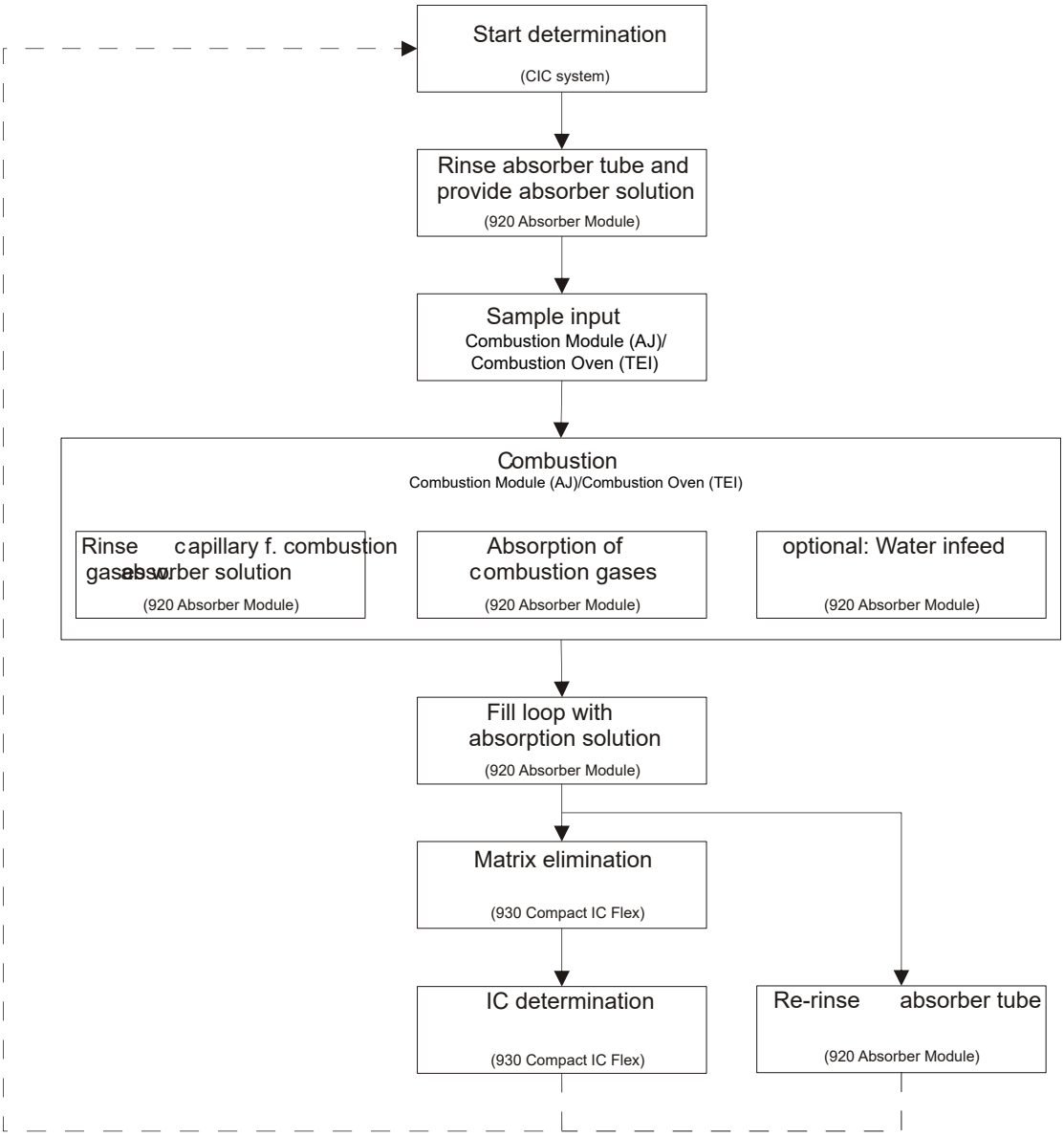

Figure 3 Sequence of the determination

NOTE

Do not mix these up!

- **Absorber solution**: e.g. H_2O_2 solution for oxidizing sulfur oxides.
- **Absorption solution**: Combustion gases dissolved in the absorber solution.

The determination is controlled entirely by MagIC Net. You can find a detailed description of the sequence in the online help for MagIC Net under the title "Combustion sequence".

3 Overview of the instrument

3.1 Front

Module overview

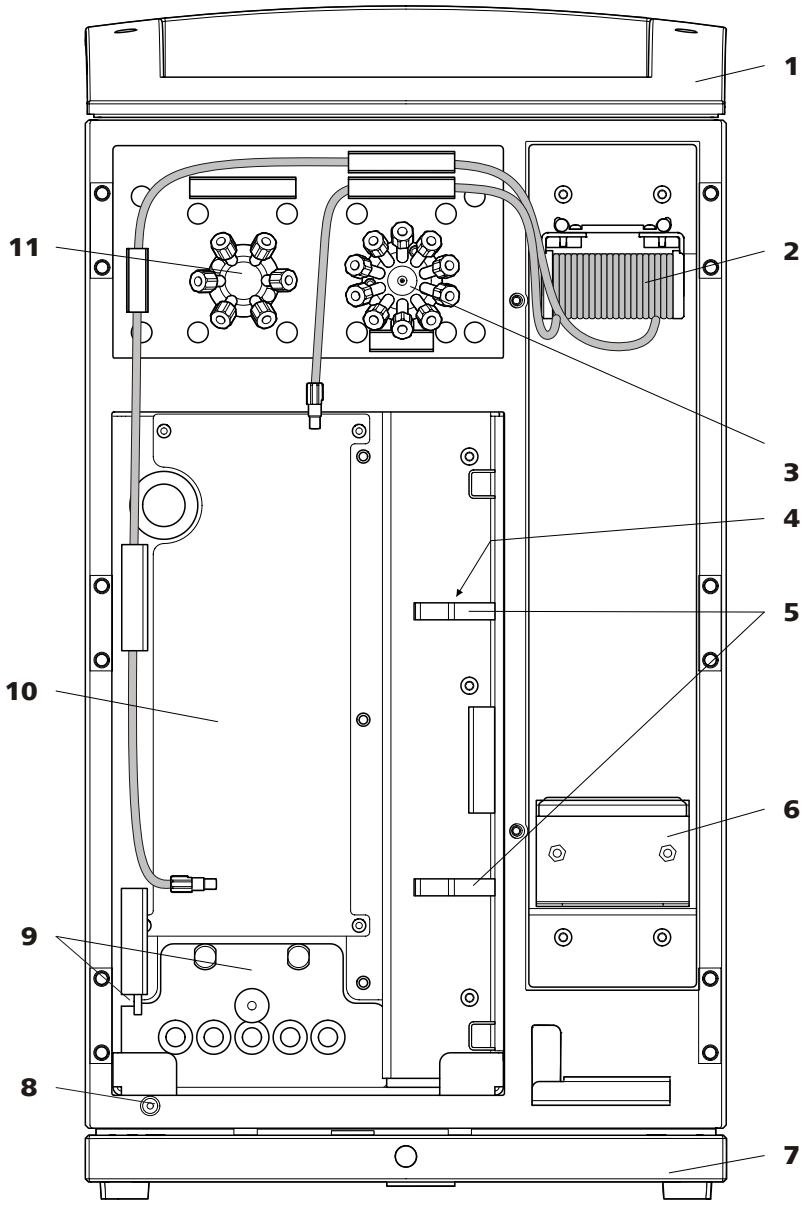

Figure 4 920 Absorber Module – Front

1 Bottle holder Protects the instrument from contamination and provides the space for the liquid containers.	**2 Transfer tubing** Pre-installed. Connects the 10-port valve with the Dosino.

3	**10-port valve** For the software-controlled connection of 10 ports.
4	**Holding clips** Two holding clips that hold the trap columns.
5	**Holding clips** To hold the absorber tube.
6	**Bottle holder** Provides space for a 100 mL bottle, e.g., for the standard solution.
7	**Base tray** Equipped with a leak sensor.
8	**Standby indicator** Flashes while the instrument is being started. Lights up when the instrument is ready for operation.
9	**Dosino holder** Two holders for the two Dosinos. One on the back panel and one on the side panel.
10	**Accessory space** Space for the Dosinos, the trap columns and the absorber tube.
11	**6-port valve** For sample preparation and sample transfer to the analysis instrument.

Capillary feed-throughs and cable feed-throughs

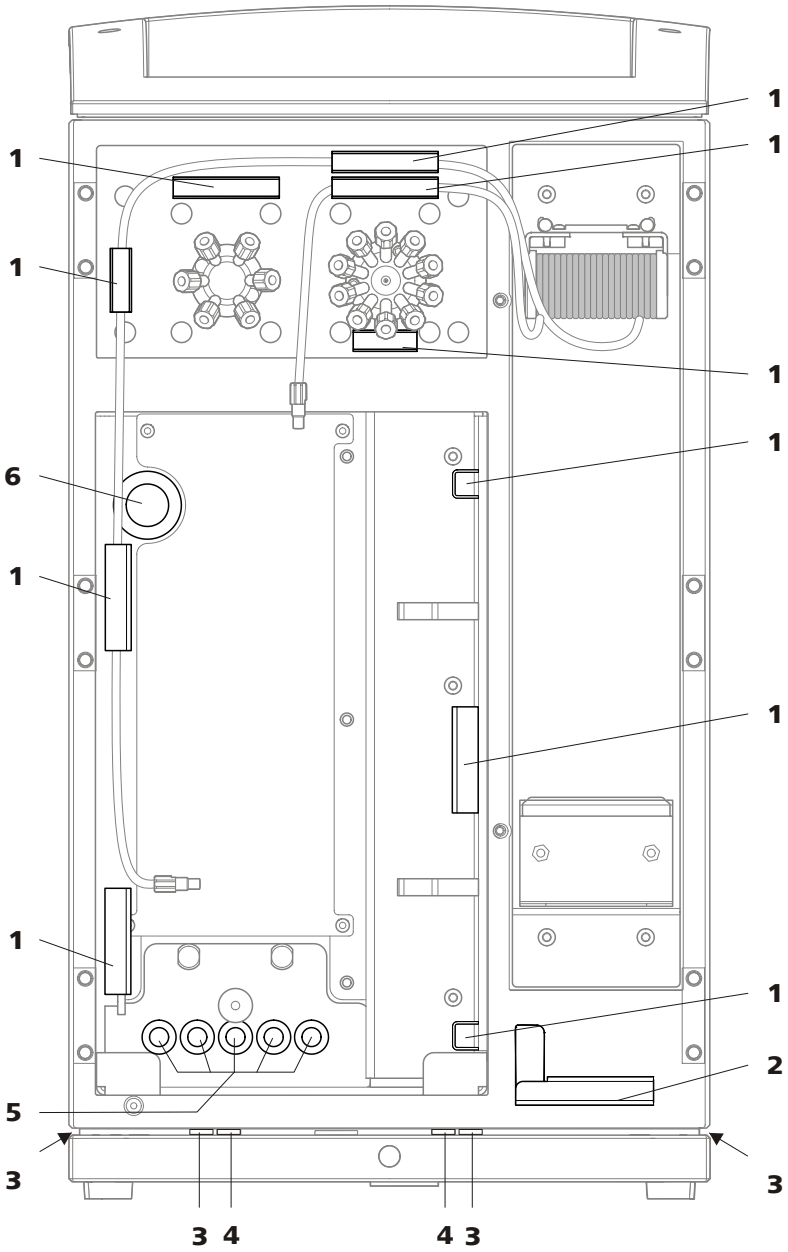

Figure 5 920 Absorber Module – Front

1 **Capillary guides** To arrange capillaries and tubings in the instrument.	**2** **Capillary guide** For the combustion gas inlet capillary (Combustion Module (AJ)).

3	**Capillary feed-throughs** Between instrument and base tray. For feeding capillaries from the front to the sides of the instrument.
4	**Capillary feed-throughs** Between instrument and base tray. For feeding capillaries from the front to the rear of the instrument.
5	**Capillary openings** For guiding capillaries and tubings out of the instrument.
6	**Cable opening** For guiding Dosino cables out of the instrument.

3.2 Rear

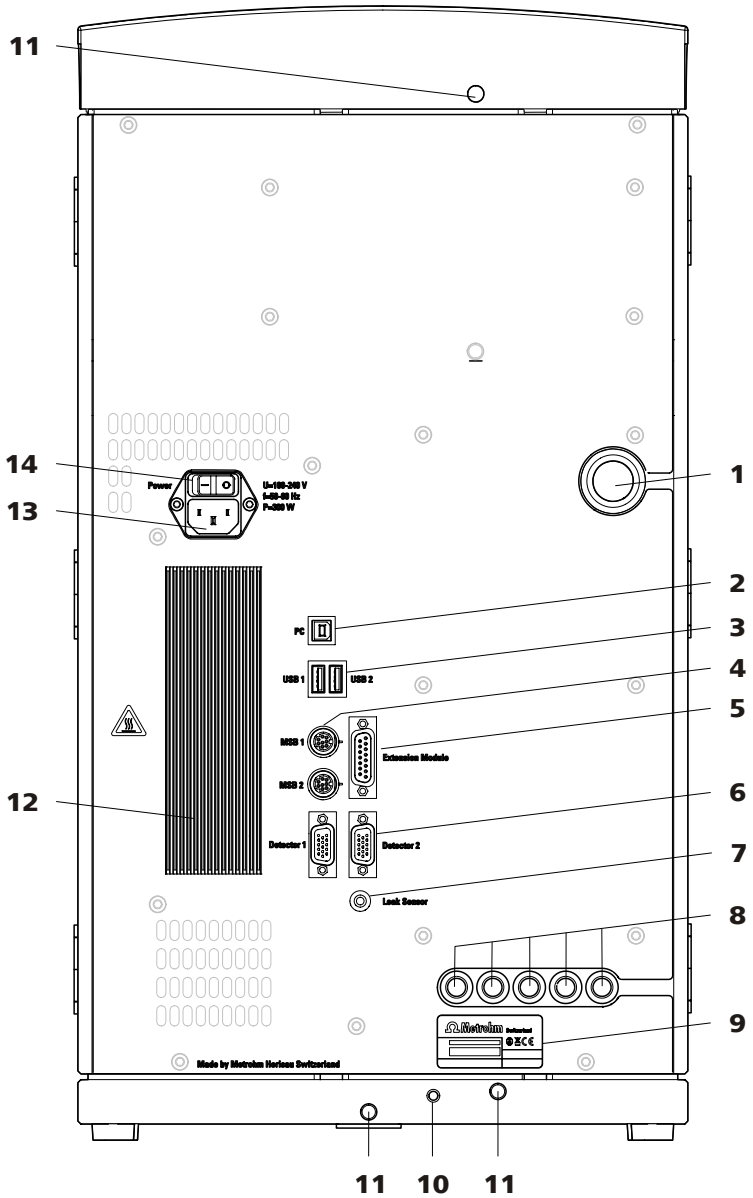

Figure 6 920 Absorber Module – Rear

1	**Cable opening** For guiding Dosino cables out of the instrument.	**2**	**PC connection socket** For connecting a computer with a USB cable.
3	**USB connection sockets** Two USB connection sockets for connecting instruments with USB connector, labeled with **USB 1** and **USB 2**.	**4**	**MSB connection sockets** Two MSB connection sockets for connecting instruments with MSB connector, labeled with **MSB 1** and **MSB 2**.

5	**Extension Module connection socket** Connection socket for an 872 Extension Module or an 891 Professional Analog Out.	**6**	**Detector connection sockets** Two connection sockets for connecting up to two detectors, labeled as **Detector 1** and **Detector 2**.
7	**Leak sensor connection socket** For connecting the leak sensor connection cable.	**8**	**Capillary openings** 5 openings on the back panel for guiding capillaries and tubings out of the instrument.
9	**Type plate** With article number and barcode.	**10**	**Leak sensor cable** Extractable. Coiled up in the base tray. Must be connected to the leak sensor connection socket.
11	**Drain nozzle** Enables liquids that have leaked from the bottle holder and inside the instrument to drain.	**12**	**Heat sink** To remove heat from inside the instrument. Caution! May become hot.
13	**Power socket** For connecting the power cord.	**14**	**On/off switch** For switching the instrument on and off.

CAUTION

Do not connect the detectors, as this will cause the instrument to not work correctly anymore.

4 Installation

4.1 Setting up the instrument

4.1.1 Packaging

The instrument is supplied in protective packaging together with the separately packed accessories. Keep this packaging, as only this ensures safe transportation of the instrument.

4.1.2 Checks

Immediately after receipt, check whether the shipment has arrived complete and without damage by comparing it with the delivery note.

4.1.3 Location

The instrument has been developed for operation indoors and may not be used in explosive environments.

Place the instrument in a location of the laboratory which is suitable for operation and free of vibrations and which provides protection against corrosive atmosphere and contamination by chemicals.

The instrument should be protected against excessive temperature fluctuations and direct sunlight.

4.2 Overview

Installation of the 920 Absorber Module

The 920 Absorber Module is provided with a wide array of accessories. These accessory parts have to be installed before the instrument can be put into operation.

Procedure

We suggest proceeding as follows to simplify the complex installation:

1. Install the Dosino for ultrapure water including a trap column and ultrapure water bottle *(see chapter 4.3, page 19)*.
2. Install the Dosino for the absorber solution including a trap column, bottle with absorber solution and T connector *(see chapter 4.4, page 39)*.
3. Connect the 10-port valve and install the bottles for the standard solution and a check standard *(see chapter 4.5, page 55)*.
4. Connect the 6-port valve *(see chapter 4.6, page 62)*.
5. Install and connect the absorber tube *(see chapter 4.7, page 68)*.
6. Connect the Combustion Module (AJ) / Combustion Oven (TEI) and the 930 Compact IC Flex *(see chapter 4.11, page 76)*.

Capillaries and tubings

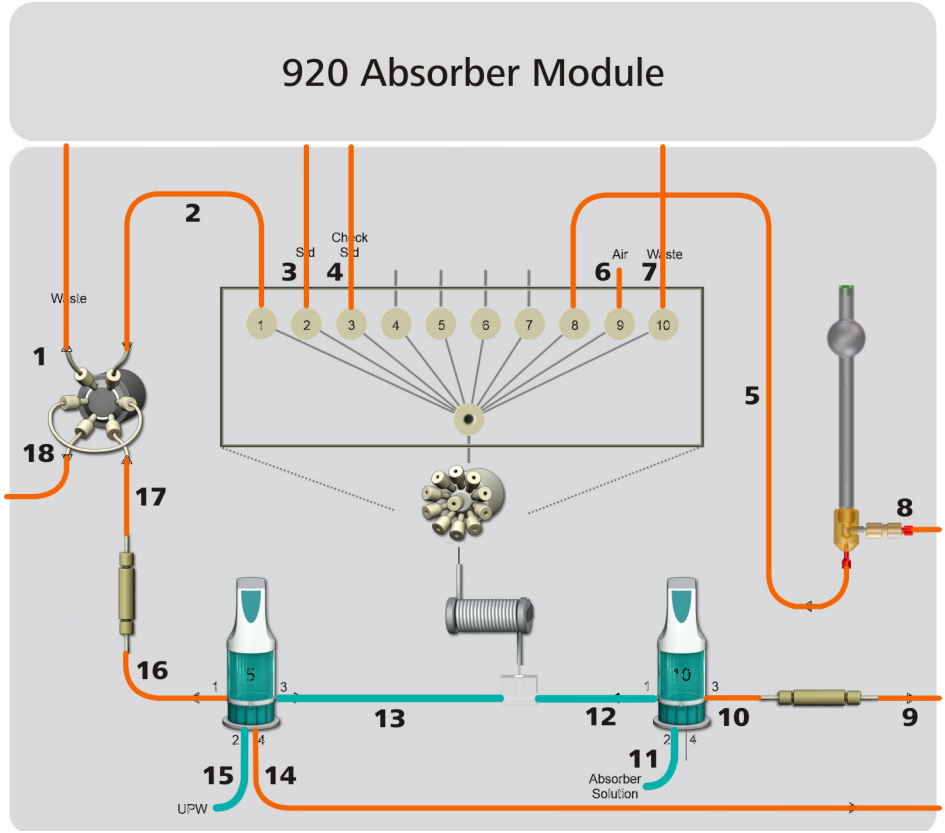

Figure 7 Capillaries and tubings in use – Overview

1	**PTFE capillary, 0.75 mm ID / 3 m (6.1803.160)** Connection between the 6-port valve and the waste container.	**2**	**PEEK capillary, 0.5 mm ID / 15 cm (6.1831.040)** Connection between the 6-port valve and the 10-port valve.
3	**PTFE capillary, 0.75 mm ID / 3 m (6.1803.160)** Approx. 80 cm. Connection between the 10-port valve and the bottle with the standard solution.	**4**	**PTFE capillary, 0.75 mm ID / 3 m (6.1803.160)** Approx. 80 cm. Connection between the 10-port valve and the bottle with the check standard.
5	**PTFE capillary, 0.75 mm ID / 3 m (6.1803.160)** Approx. 60 cm. Connection between the 10-port valve and the absorber tube.	**6**	**PTFE capillary, 0.75 mm ID / 3 m (6.1803.160)** Approx. 5 cm. For aspirating air segments.
7	**PTFE capillary, 0.75 mm ID / 3 m (6.1803.160)** Connection between the 10-port valve and the waste container.	**8**	**Combustion Module (AJ): PTFE capillary 1/8 in. OD / 1/16 in. ID / 1.5 m | Combustion Oven (TEI): PTFE capillary 1/8 in. OD / 1/16 in. ID / 5 m** Connection between the absorber tube and the Combustion Module (AJ) / Combustion Oven (TEI).

9	**Combustion Module (AJ): PTFE capillary 0.5 mm ID / 3 m (6.1803.030) | Combustion Oven (TEI): PTFE capillary 0.8 mm ID / 2.5 m (capillary absorber solution)** Connection between the Metrosep A Trap 1 - 100/4.0 trap column (6.1014.000) and the Combustion Module (AJ) / Combustion Oven (TEI).
10	**PTFE capillary, 0.5 mm ID / 3 m (6.1803.030)** Approx. 20 cm. Connection between the Dosino with the absorber solution and the Metrosep A Trap 1 - 100/4.0 trap column (6.1014.000).
11	**FEP tubing M6 for 920 150 cm (6.1805.030) with FEP aspiration tubing (6.1819.100)** Aspiration tubing for the absorber solution. Connection between the Dosino with the absorber solution and the bottle with the absorber solution.
12	**FEP tubing M6 for 920, 13 cm (6.1805.010)** Connection between the Dosino with the absorber solution and the T connector.
13	**FEP tubing M6 for 920, 13 cm (6.1805.010)** Connection between the Dosino with ultrapure water and the T connector.
14	**Combustion Module (AJ): PTFE capillary 0.5 mm ID / 3 m (6.1803.030) | Combustion Oven (TEI): PTFE capillary 0.8 mm ID / 2.5 m (6.07311.310)** Connection between the Dosino with ultrapure water and the Combustion Module (AJ) / Combustion Oven (TEI).
15	**FEP tubing M6 for 920 150 cm (6.1805.030) with FEP aspiration tubing (6.1819.100)** Aspiration tubing for ultrapure water. Connection between the Dosino with the water bottle.
16	**PTFE capillary, 0.5 mm ID / 3 m (6.1803.030)** Approx. 30 cm. Connection between the Dosino with ultrapure water and the Metrosep I Trap 1 - 100/4.0 trap column (6.1014.200).
17	**PTFE capillary, 0.5 mm ID / 3 m (6.1803.030)** Approx. 40 cm. Connection between the Metrosep I Trap 1 - 100/4.0 trap column (6.1014.200) and the 6-port valve.
18	**PTFE capillary, 0.5 mm ID / 3 m (6.1803.030)** Connection between the 6-port valve and the 930 Compact IC Flex.

Colored sleeves

Different liquids move throughout the 920 Absorber Module. In order to provide you an overview of the different flow paths, we recommend using the provided colored sleeves as follows to code the capillaries that route the distinct liquids:

Table 1 Recommended color codes for the flow paths

Liquid	Colored sleeve
Ultrapure water	blue

Liquid	Colored sleeve
Absorber solution	yellow
Standard solution	black
Check standard	red
Waste	white

NOTE

The colored sleeves are heat-shrink tubing; this means they shrink when they are exposed to heat.

Slip the colored sleeve over the capillary and secure it to the desired spot by heating it, for example by using a hairdryer.

4.3 Dosino for ultrapure water

The Dosino for ultrapure water is installed first.

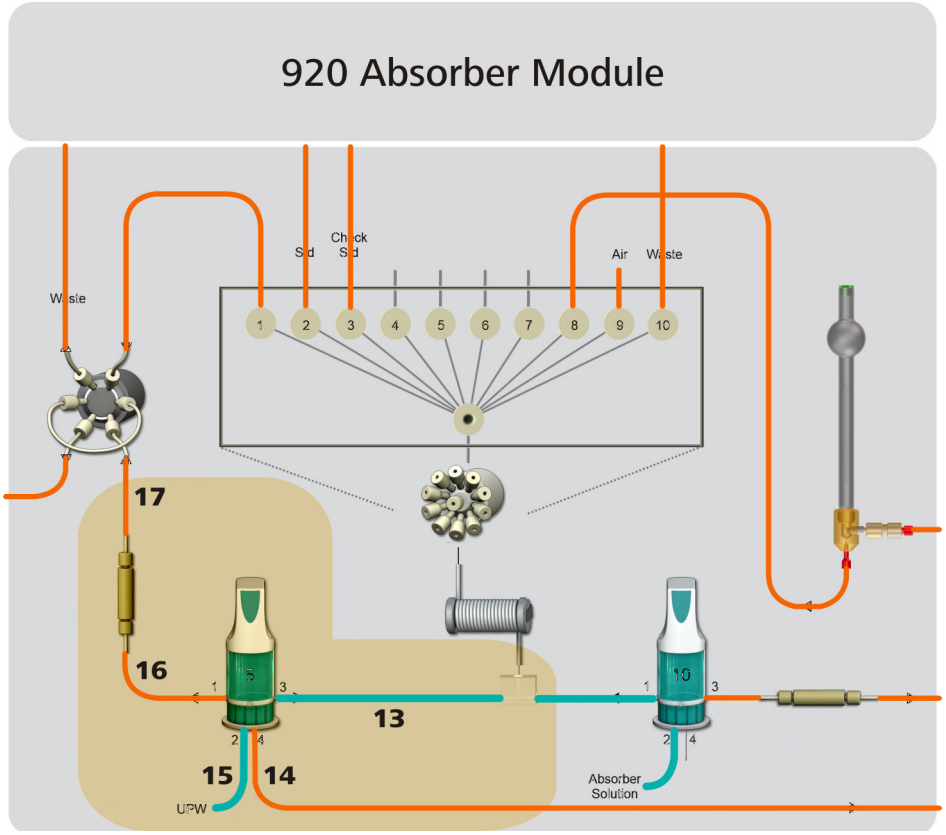

Figure 8 Installing the Dosino for ultrapure water

13	**FEP tubing M6 for 920, 13 cm (6.1805.010)** Connection between the Dosino with ultrapure water and the T connector.
14	**Combustion Module (AJ): PTFE capillary 0.5 mm ID / 3 m (6.1803.030) | Combustion Oven (TEI): PTFE capillary 0.8 mm ID / 2.5 m (6.07311.310)** Connection between the Dosino with ultrapure water and the Combustion Module (AJ) / Combustion Oven (TEI).
15	**FEP tubing M6 for 920 150 cm (6.1805.030) with FEP aspiration tubing (6.1819.100)** Aspiration tubing for ultrapure water. Connection between the Dosino with the water bottle.
16	**PTFE capillary, 0.5 mm ID / 3 m (6.1803.030)** Approx. 30 cm. Connection between the Dosino with ultrapure water and the Metrosep I Trap 1 - 100/4.0 trap column (6.1014.200).
17	**PTFE capillary, 0.5 mm ID / 3 m (6.1803.030)** Approx. 40 cm. Connection between the Metrosep I Trap 1 - 100/4.0 trap column (6.1014.200) and the 6-port valve.

The Dosino is equipped with a 5 mL dosing unit and is inserted in the back in the accessory space *(4-**10**)*. It has 3 tasks:

- Dosing the water infeed during combustion.

- Dosing the transfer water for matrix elimination of the sample.
- Liquid handling.

Dosing the water infeed during combustion

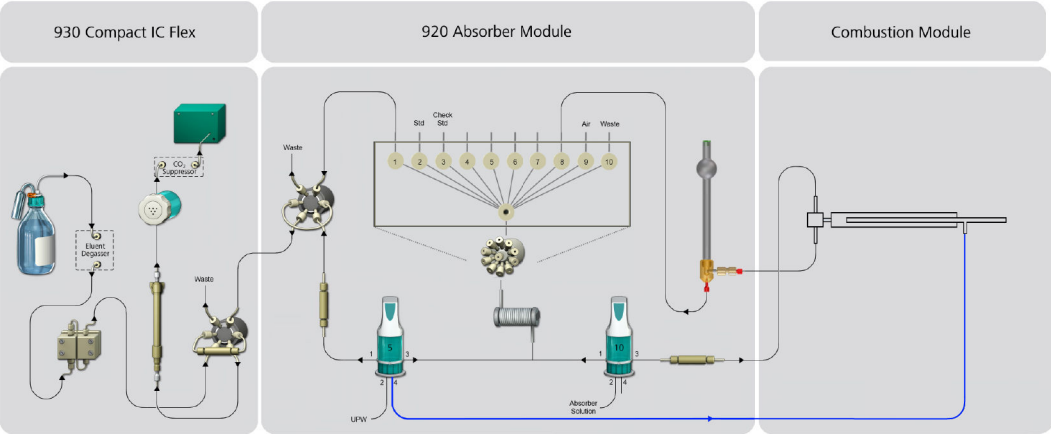

Feeding water in at the combustion tube's inlet supports the combustion process and increases the recovery rate, particularly for fluoride. To do so, the Dosino aspirates the ultrapure water from the bottle and doses a very small amount through port 4 to the combustion tube's inlet. The time and quantity of the water infeed are defined in MagIC Net™.

Dosing transfer water for the sample

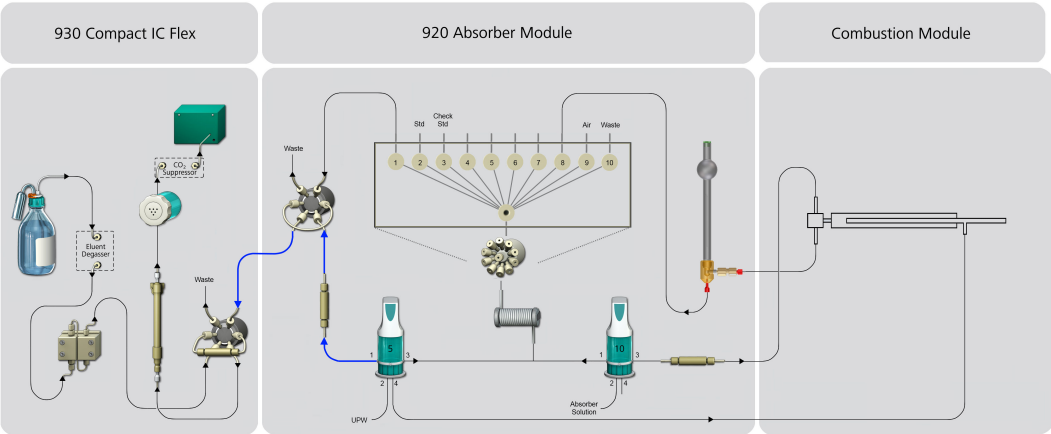

The transfer water transports the sample to the IC instrument. In order to obtain accurate analysis results, the transfer water has to be free of ionic contamination. To remove all traces of ionic contamination, a Metrosep I Trap 1 – 100/4.0 (6.1014.200) column is used between the Dosino for ultrapure water and the 6-port valve.

The Dosino aspirates ultrapure water from the bottle and starts by dosing it to the Metrosep I Trap 1 – 100/4.0 (6.1014.200) through port 1 and to port 5 of the 6-port valve from there.

Liquid handling

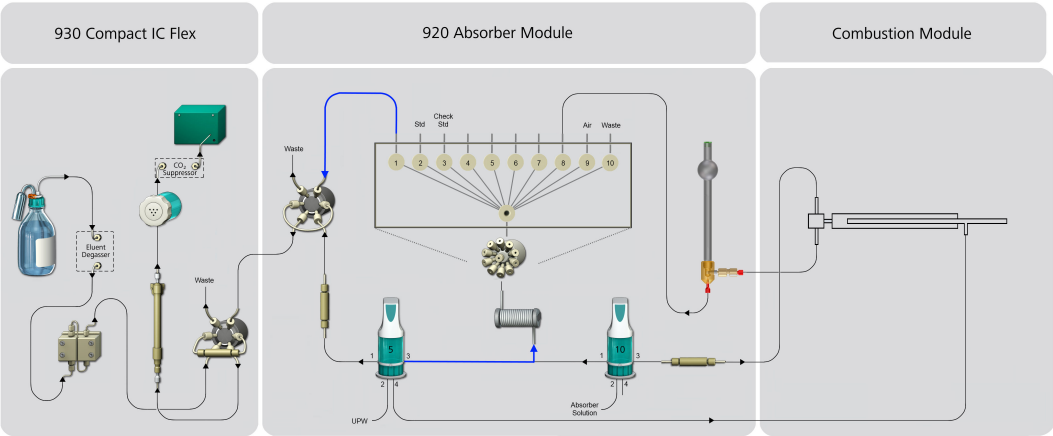

A Dosino can either aspirate or discharge defined quantities of liquids via its 4 ports. In conjunction with the 10-port valve, it is used to transport liquids through the Combustion IC system. This process is called liquid handling.

Port 3 of the Dosino is connected to transfer tubing and is used for liquid handling.

Recommended procedure for installation

1. Assemble the Dosino *(see chapter 4.3.1, page 22)*.
2. Guide the capillary for the infeed of water during combustion into the instrument *(see chapter 4.3.2, page 23)*.
3. Connect port 2 and port 4 *(see "Connecting port 2 and port 4", page 26)*.
4. Connect port 1 and port 3 *(see "Connecting port 1 and port 3", page 31)*.
5. Place the Dosino in the instrument *(see chapter 4.3.5, page 33)*.
6. Connect the Metrosep I Trap 1 - 100/4.0 trap column and insert it in the instrument *(see chapter 4.3.6, page 34)*.
7. Connect the ultrapure water bottle *(see chapter 4.3.7, page 37)*.

4.3.1 Assembling the Dosino

Accessories

For this step you need:

- 800 Dosino (2.800.0010)
- 807 Dosing Unit 5 mL (6.3032.150)

Attaching the Dosino to the 807 Dosing Unit

The manual for the 800 Dosino describes how to attach the 800 Dosino correctly to a dosing unit.

CAUTION

Please read through the correct procedure in the manual for the 800 Dosino before you attach the Dosino to the dosing unit.

Plugging in the connection cable

1. Route the connection cable for the Dosino out the back panel *(6-**1**)* of the instrument through the cable opening.
2. Plug the plug for the connection cable into the **MSB 2** socket.

Next step Feed the capillary for the water infeed *(8-**14**)* into the instrument.

4.3.2 Feeding the capillary into the instrument for Combustion Module (AJ)

Accessories For this step you need:

- PTFE capillary (6.1803.030)
- Colored sleeves, blue

Feeding the capillary for the water infeed into the instrument

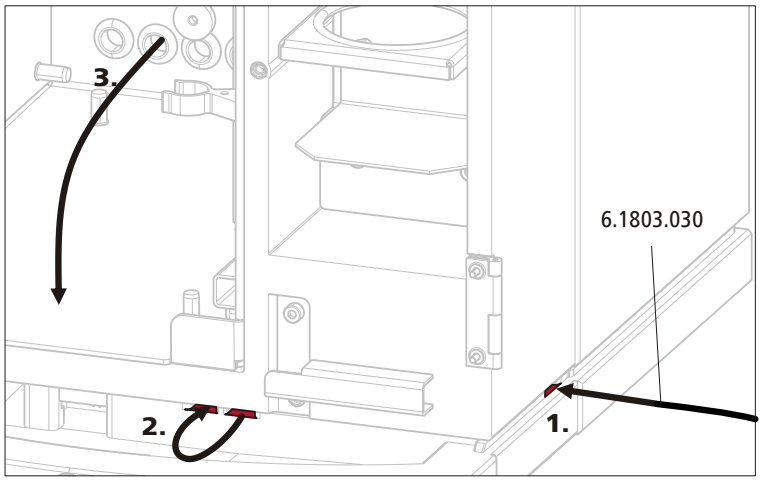

The arrows in the figure point in the direction the capillaries have to be pushed.

1 Feeding the capillary for the water infeed into the instrument

- Slide a blue colored sleeve over the capillary far enough that it remains visible outside the instrument.
- Push the capillary into the instrument through one of the 5 capillary openings on the back panel.

Next step Connect the ports *(see chapter 4.3.4, page 25)*.

4.3.3 Feeding the capillary into the instrument for Combustion Oven (TEI)

Accessories For this step you need:

- PTFE capillary of the oxygen and ultrapure water connection tubing (6.07311.310)
- Colored sleeves, blue

Feeding the capillary for the water infeed into the instrument

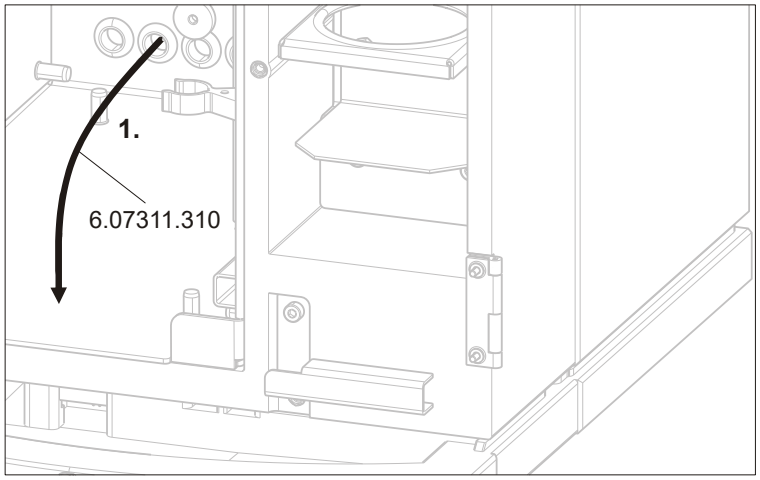

The arrows in the figure point in the direction the capillaries have to be pushed.

1 Feeding the capillary for the water infeed into the instrument

- Slide a blue colored sleeve over the capillary far enough that it remains visible outside the instrument.

- Push the capillary into the instrument through one of the 5 capillary openings on the back panel.

Next step Connect the ports *(see chapter 4.3.4, page 25)*.

4.3.4 Connecting the ports – Overview

Use of the ports The ports on the Dosino for ultrapure water are used as follows:

Port …	… is used for …	… and is connected to
1	Dosing transfer water	Metrosep I Trap 1 - 100/4.0 trap column (6.1014.200) inlet
2	Aspirating ultrapure water	Water bottle
3	Liquid handling	T connector
4	Water infeed during combustion	Combustion tube's inlet in the Combustion Module (AJ) / Combustion Oven (TEI)

Accessories The following accessories have to be connected to the Dosino for ultrapure water:

Port	Install this accessory
1	▪ PTFE capillary (6.1803.030), approx. 30 cm *(8-**16**)* ▪ Pressure screw (6.2744.350) ▪ Coupling (6.2744.080)
2	FEP tubing M6 for 920 150 cm (6.1805.030) with FEP aspiration tubing (6.1819.100) *(8-**15**)*
3	FEP tubing M6 for 920, 13 cm (6.1805.010) *(8-**13**)*
4	▪ Combustion Module (AJ): PTFE capillary (6.1803.030) *(8-**14**)* ▪ Combustion Oven (TEI): PTFE capillary (6.07311.310) *(8-**14**)* ▪ Pressure screw (6.2744.350) ▪ Coupling (6.2744.080) ▪ Blue colored sleeve

For this step you also need:

- Thread adapter (6.1618.020)
- Dosino holder (6.2057.230)
- Capillary cutter (6.2621.080)

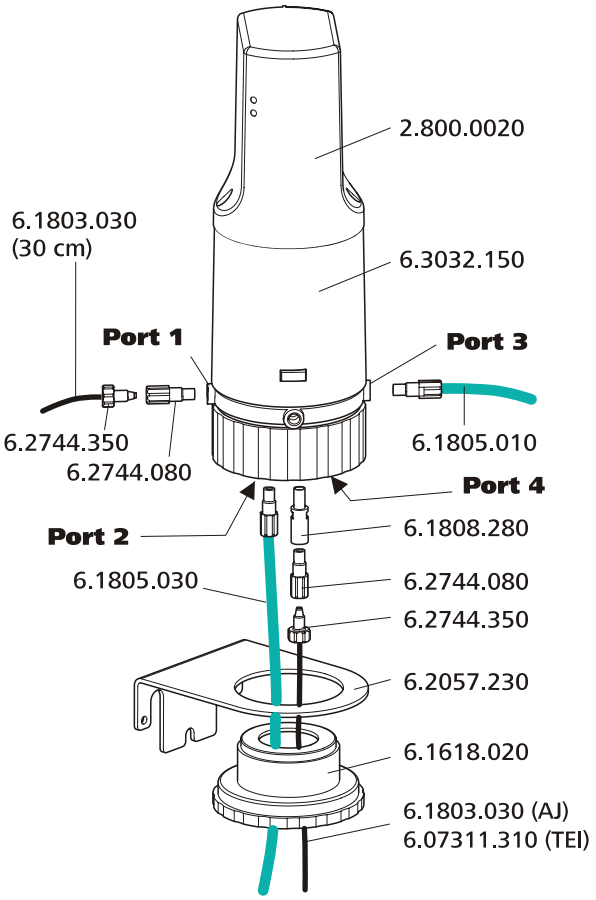

Figure 9 Connect the Dosino for ultrapure water

Connecting port 2 and port 4

Port 2 and port 4 of the Dosino are on the bottom of the instrument. These ports are connected first.

Accessories

The following accessories have to be connected to these 2 ports:

Port	… install this accessory
2	FEP tubing M6 for 920 150 cm (6.1805.030) with FEP aspiration tubing (6.1819.100) *(8-**15**)*
4	▪ PTFE capillary for Combustion Module (AJ) (6.1803.030) *(8-**14**)* ▪ PTFE capillary for Combustion Oven (TEI) (6.07311.310) ▪ Pressure screw (6.2744.350) ▪ Coupling (6.2744.080) ▪ Adapter Dosino Port 4 (6.1808.280)

For this step you also need:

- Thread adapter (6.1618.020)
- Dosino holder (6.2057.230)
- Colored sleeves, blue

Preparing

Before you can connect the capillary and the aspiration tubing, you have to:

- Install the coupling for the connection between the capillary and Dosino.
- Thread the capillary for the water infeed and the aspiration tubing through the thread adapter and the Dosino holder.

1 Mounting the coupling

The ports on the Dosino are intended for tubing with an M6 connector. If capillaries are connected to the ports, a coupling has to be installed at the end.

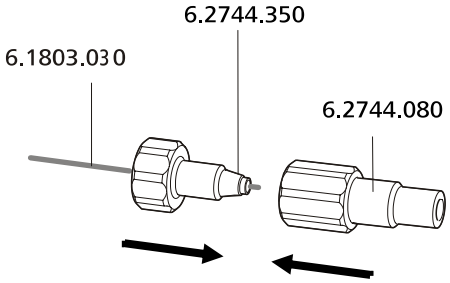

- Optional: Guide a blue colored sleeve over the end of the capillary.
- During the installation of the Combustion Oven (TEI), the PTFE capillary (6.07311.310) must be shortened to the required length with a capillary cutter.
- Push the pressure screw over the end of the PTFE capillary far enough that a few millimeters of the capillary extend beyond the tip of the pressure screw.
- Attach the coupling on the pressure screw and tighten it by hand.

2 Threading the Dosino holder and thread adapter

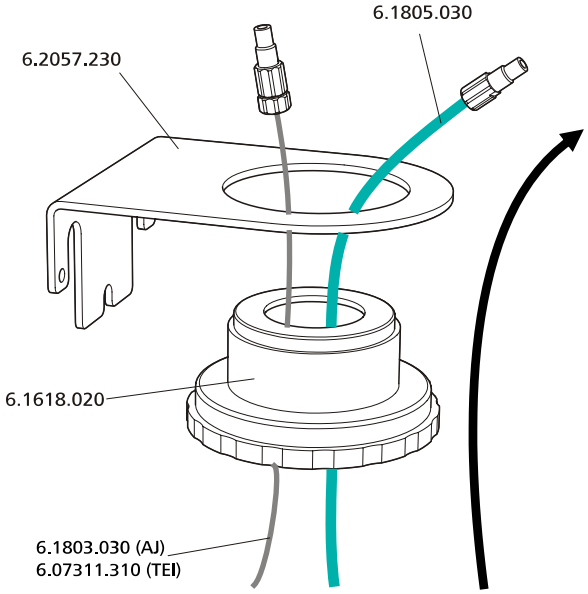

- Start by threading the FEP tubing through the thread adapter from below and then through the Dosino holder.
- Start by threading the PTFE capillary through the thread adapter from below and then through the Dosino holder.

The capillary for the water infeed and the water aspiration tubing can now be connected to the Dosino. Proceed as follows:

Connecting port 2

Prerequisites

- FEP tubing M6 to 920 150 cm (6.1805.030) is threaded in through the thread adapter (6.1618.020) and the Dosino holder (6.2057.230).

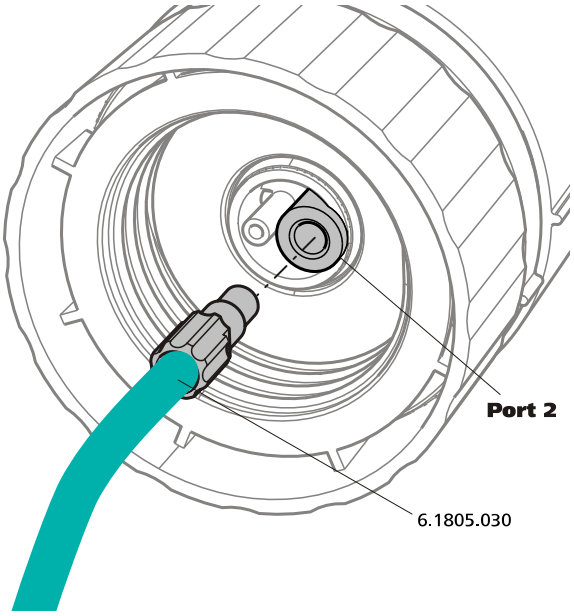

1 Mounting the FEP tubing

Tighten the FEP tubing on port 2 of the dosing unit.

2 Routing the FEP tubing out of the instrument

Guide the loose end of the FEP tubing out of the 920 Absorber Module through one of the capillary openings on the back panel of the instrument.

Connecting port 4

Prerequisites:

- The PTFE capillary for the Combustion Module (AJ) (6.1803.030) or the PTFE capillary for the Combustion Oven (TEI) (6.07311.310) is threaded in through the thread adapter (6.1618.020) and the Dosino holder (6.2057.230).
- The coupling is installed on the end of the capillary.

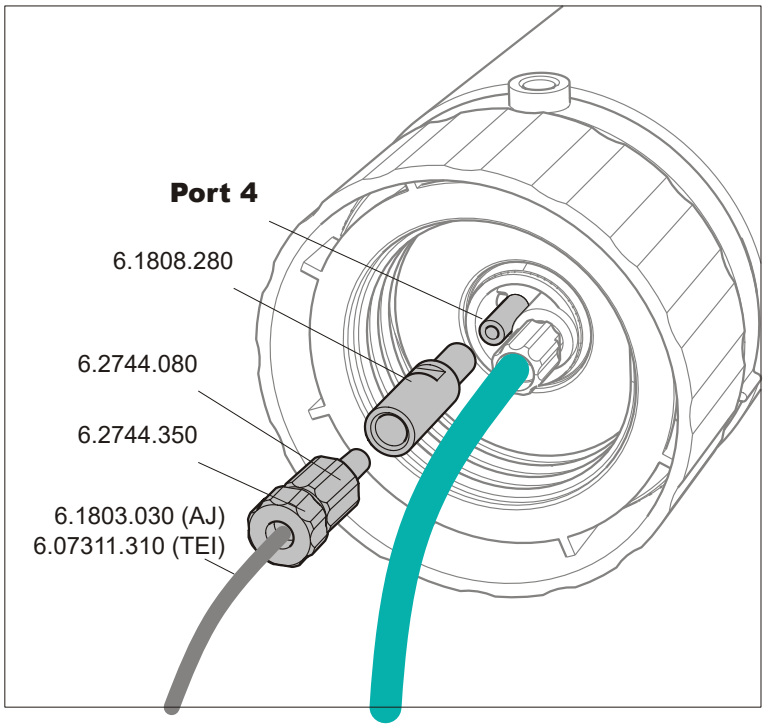

1 Mounting the adapter

Attach the Adapter Dosino port 4 (6.1808.280) onto port 4 of the dosing unit.

2 Mount the capillary

Tighten the PTFE capillary on the Adapter Dosino port 4.

Tightening the Dosino holder

Prerequisites:

The FEP tubing (6.1805.030) and the PTFE capillary for the Combustion Module (AJ) (6.1803.030) or the PTFE capillary for the Combustion Oven (TEI) (6.07311.310) are threaded in through the thread adapter (6.1618.020) and the Dosino holder (6.2057.230) and are connected to the ports 2 and 4.

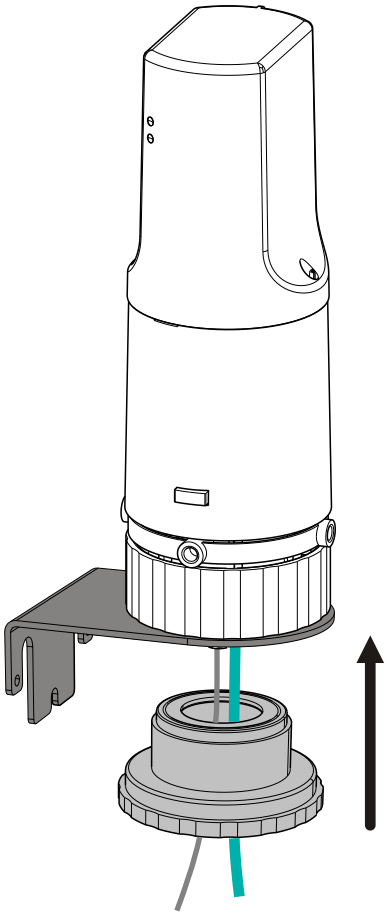

1 Tighten the Dosino holder (6.2057.230) with the thread adapter (6.1618.020) on the bottom of the dosing unit.

Next step

- Connect the ports 1 and 3.

Connecting port 1 and port 3

Port 1 on the left side of the Dosino is used for dosing water, which is used for transferring the sample from the 6-port valve to the analysis instrument. The transfer water is purified using a Metrosep I Trap 1 – 100/4.0 (6.1014.200) trap column so that it does not contaminate the sample with undesired anions and cations.

Port 3 on the right side of the Dosino is used for connecting transfer tubing. It is used for liquid handling.

Accessories

The following accessories have to be connected to these 2 ports:

Port	… install this accessory
1	▪ 30 cm of the PTFE capillary (6.1803.030) *(8-**16**)* ▪ Pressure screw (6.2744.350) ▪ Coupling (6.2744.080)
3	FEP tubing M6 for 920, 13 cm (6.1805.010) *(8-**13**)*

For this step you also need:

- Capillary cutter (6.2621.080)

Connecting port 1

1 Cutting the PTFE capillary to size

- Cut off a piece of the PTFE capillary that is approx. 30 cm long using the capillary cutter.

2 Mounting the coupling

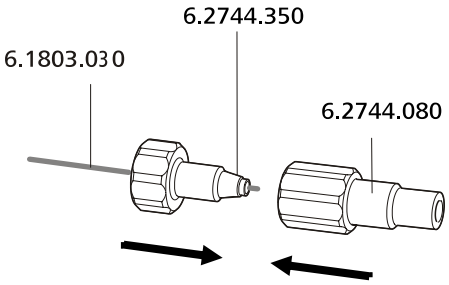

- Push the pressure screw over the end of the PTFE capillary far enough that a few millimeters of the capillary extend beyond the tip of the pressure screw.
- Attach the coupling on the pressure screw and tighten it by hand.

3 Connecting the PTFE capillary

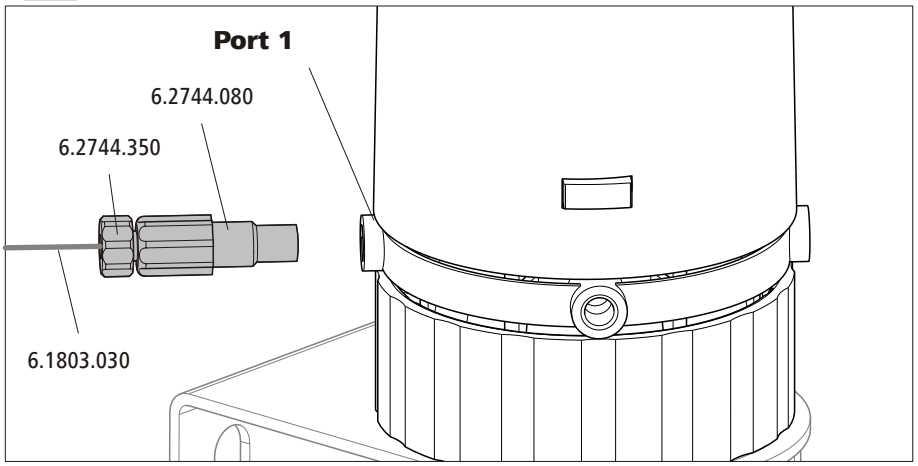

- Tighten the coupling to port 1 of the dosing unit.

Connecting port 3

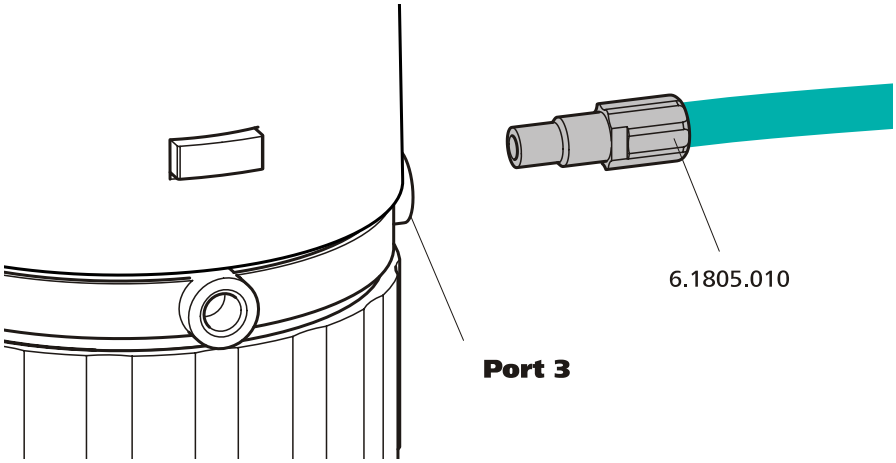

1 Mounting the FEP tubing

Tighten the FEP tubing on port 3 of the dosing unit.

Next step Place the Dosino for ultrapure water into the instrument.

4.3.5 Inserting the Dosino in the instrument

CAUTION

Space is limited in the 920 Absorber Module.

When you insert the fully connected Dosino into the instrument, ensure that none of the tubing or capillaries are bent or kinked. Turn the Dosino so that the capillaries and tubing can be as straight as possible.

Inserting the Dosino in the instrument

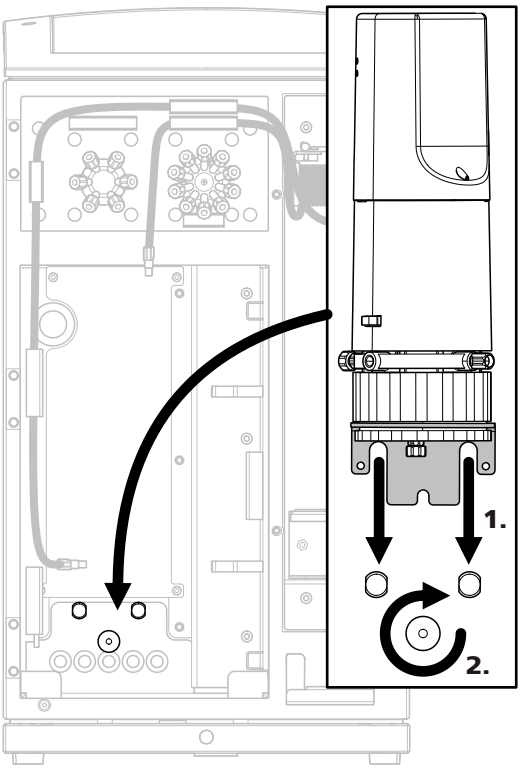

1 Place the Dosino holder onto the mounting bolts and fix it in place using the knurled screw.

Next steps

Connect capillary/ tubing at port …	… to
1	Metrosep I Trap 1 - 100/4.0 (6.1014.200) trap column inlet *(see chapter 4.3.6, page 34)*
2	Water bottle *(see chapter 4.3.7, page 37)*
3	T connector *(see chapter 4.4.4, page 47)*
4	Combustion oven inlet *(see chapter 4.11.1, page 76)*

4.3.6 Connecting the Metrosep I Trap 1

The Metrosep I Trap 1 – 100/4.0 trap column (6.1014.200) removes disruptive interfering anions and cations from the ultrapure water used for transferring the absorption solution from the absorber tube to the 6-port valve. The use of the trap column ensures that the analysis is not distorted by unwanted contamination.

The Metrosep I Trap 1 – 100/4.0 is used between the Dosino for ultrapure water and the 6-port valve.

The …	… is connected to
Inlet	Dosino for ultrapure water
Outlet	6-port valve

Accessories

The following accessories have to be connected to the trap column:

At the …	… install this accessory
Inlet	▪ 30 cm of the PTFE capillary (6.1803.030) *(8-**16**)* ▪ Pressure screw (6.2744.010)
Outlet	▪ 40 cm of the PTFE capillary (6.1803.030) *(8-**17**)* ▪ Pressure screw (6.2744.010)

Connecting the Metrosep I Trap 1 – 100/4.0

NOTE

The trap column is sealed with threaded stoppers at both ends.

Remove these threaded stoppers before connecting the capillaries.

CAUTION

Flow can only move through the trap column in one direction. This flow direction is marked on the column with an engraved arrow.

Be absolutely sure to note this flow direction when connecting the capillaries.

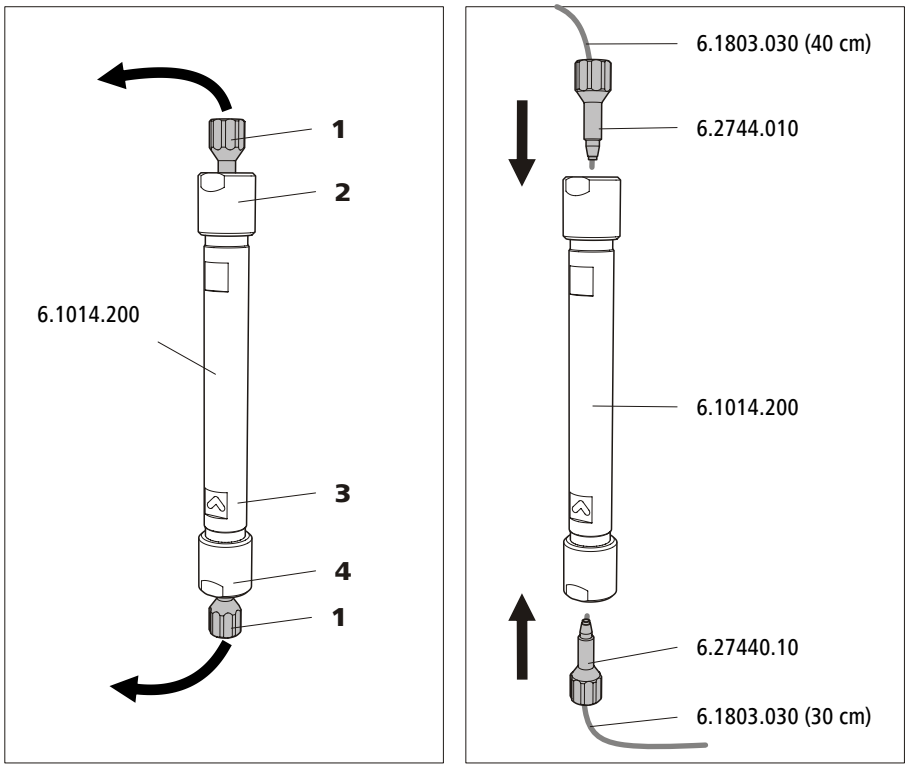

1	**Threaded stopper**	**2**	**Column outlet**
3	**Flow direction indicator**	**4**	**Column inlet**

1 Removing the threaded stoppers

Remove the threaded stoppers at the inlet and outlet of the Metrosep I Trap 1 – 100/4.0.

2 Connecting the capillaries

- Screw the loose end of the PTFE capillary connected to port 1 of the Dosino for ultrapure water to the inlet of the trap column using a pressure screw.
- Cut off a piece from the PTFE capillary (6.1803.030) that is approx. 40 cm long using the capillary cutter (6.2621.080) and tighten it onto the outlet of the trap column using a pressure screw.

Inserting the trap column in the instrument

Insert the Metrosep I Trap 1 – 100/4.0 in the instrument as follows:

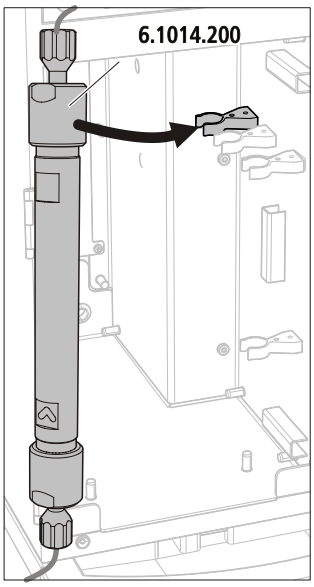

1 Fasten the Metrosep I Trap 1 – 100/4.0 in place in the rear holding bracket *(4-**4**)* of the 920 Absorber Module using the column head.

Next step

Tighten the loose end of the PTFE capillary at the outlet of the trap column to port 5 of the 6-port valve *(see chapter 4.6, page 62)*.

4.3.7 Connecting the ultrapure water bottle

The ultrapure water bottle has to be connected to port 2 of the Dosino for ultrapure water.

Accessories

For this step you need:

- Clear glass bottle 2 L (6.1608.070) filled with ultrapure water.
- Bottle cap (6.1602.160)
- FEP tubing M6 for 920 150 cm (6.1805.030) with aspiration tubing (6.1819.100) *(8-**15**)*.
- Adsorber tube (6.1609.000)
- Cotton
- Adsorber granulate

Connecting the bottle with ultrapure water

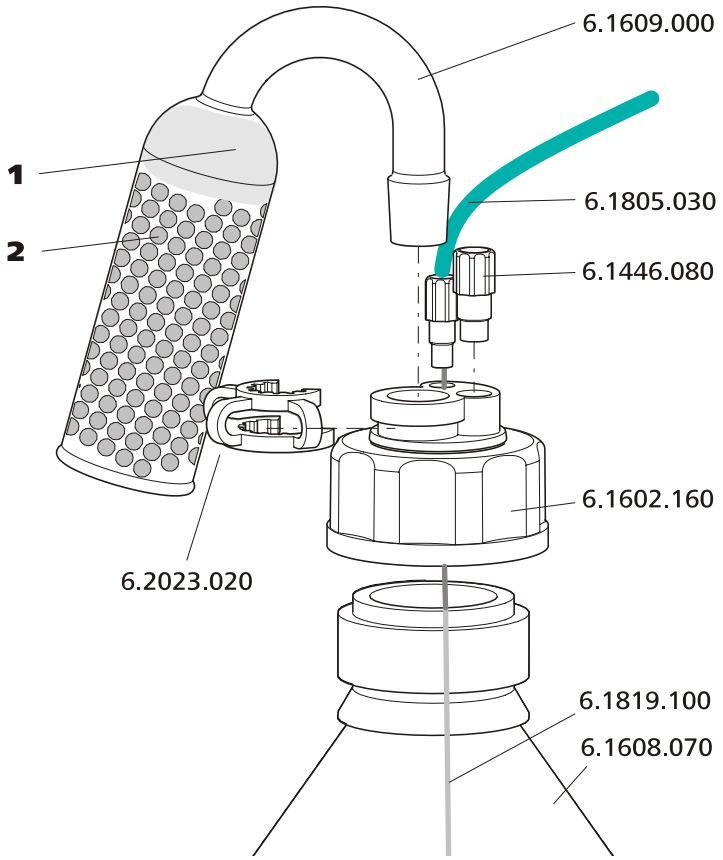

1	**Cotton**	**2**	**Adsorber granulate**

1 Screw the bottle cap onto the bottle.

2 Push the FEP aspiration tubing (6.1819.100) through the M6 opening and screw it tight in the M6 opening.

3 Fill the adsorber tube with a little cotton and adsorber granulate and seal it with the plastic cover.

4 Place the adsorber tube into the large opening of the bottle cap and fasten it in place with the SGJ clip.

5 Seal the M8 opening with a stopper.

4.4 Dosino for the absorber solution

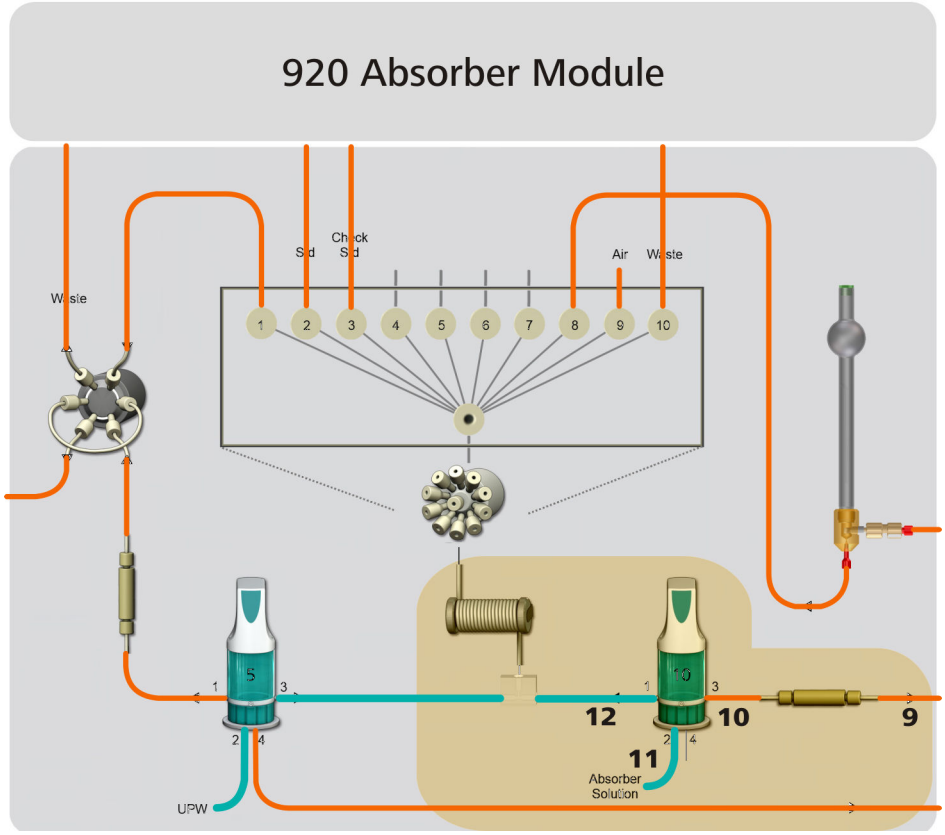

Figure 10 Installing the Dosino for the absorber solution

9	**Combustion Module (AJ): PTFE capillary 0.5 mm ID / 3 m (6.1803.030) / Combustion Oven (TEI): PTFE capillary 0.5 mm ID / 3 m (capillary absorber solution)** Connection between the Metrosep A Trap 1 - 100/4.0 trap column (6.1014.000) and the Combustion Module (AJ) / Combustion Oven (TEI).
10	**PTFE capillary, 0.5 mm ID / 3 m (6.1803.030)** Approx. 20 cm. Connection between the Dosino with the absorber solution and the Metrosep A Trap 1 - 100/4.0 trap column (6.1014.000).
11	**FEP tubing M6 for 920 150 cm (6.1805.030) with FEP aspiration tubing (6.1819.100)** Aspiration tubing for the absorber solution. Connection between the Dosino with the absorber solution and the bottle with the absorber solution.
12	**FEP tubing M6 for 920, 13 cm (6.1805.010)** Connection between the Dosino with the absorber solution and the T connector.

The Dosino for the absorber solution is equipped with a 10 mL dosing unit and has the following tasks:

- Dosing the absorber solution.
- Transferring the absorption solution to the 10-port valve.

Dosing the absorber solution

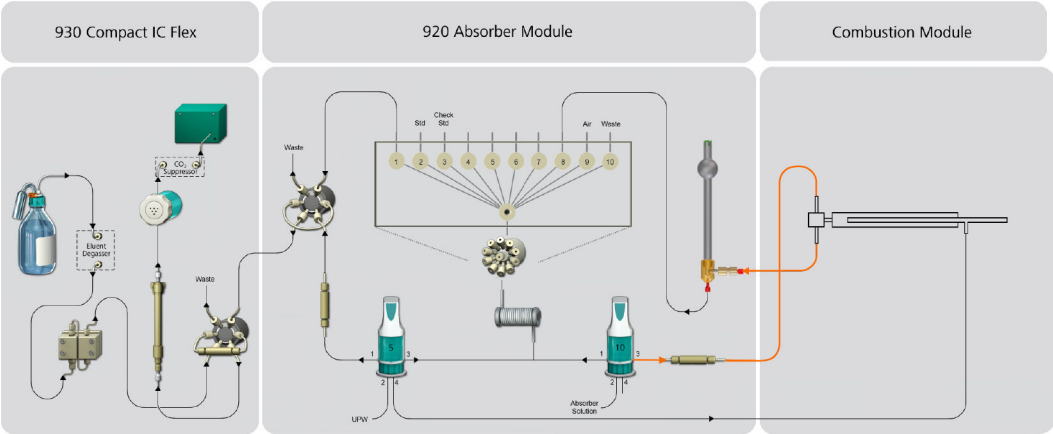

The absorber solution is dosed to the combustion tube's outlet in the Combustion Module (AJ) / Combustion Oven (TEI). It absorbs the gases from combustion and carries them to the absorber tube.

Transferring the absorption solution to the 10-port valve

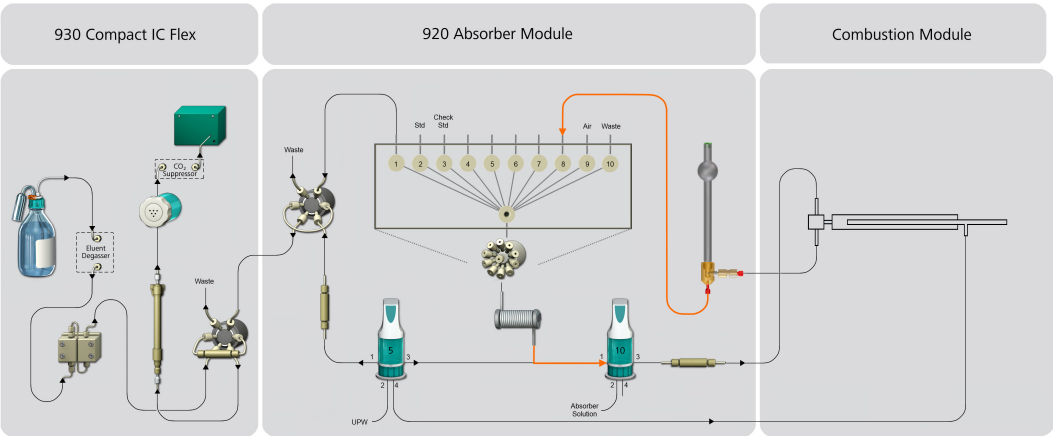

Drawing the absorption solution out of the absorber tube.

4.4.1 Assembling the Dosino

Accessories

For this step you need:

- 800 Dosino (2.800.0010)
- Dosing unit 10 mL (6.3032.210)

Attaching the Dosino to the 807 Dosing Unit

The manual for the 800 Dosino describes how to attach the 800 Dosino correctly to a dosing unit.

CAUTION

Please read through the correct procedure in the manual for the 800 Dosino before you attach the Dosino to the dosing unit.

Plugging in the connection cable

1. Route the connection cable of the Dosino for the absorber solution out of the instrument through the cable opening *(6-**1**)* in the back panel.

2. Plug the plug for the connection cable into the **MSB 1** socket.

4.4.2 Connecting the ports – Overview

Use of the ports

The ports on the Dosino for the absorber solution are used as follows:

Port …	… is used for …	… and is connected to
1	Liquid handling	T connector
2	Aspirating the absorber solution	Bottle with absorber solution
3	Dosing the absorber solution	Metrosep A Trap 1 - 100/4.0 (6.1014.000) trap column inlet
4	Not used	

Accessories

The following accessories have to be connected to the Dosino for the absorber solution:

Port	Install this accessory
Port 1	FEP tubing M6 for 920, 13 cm (6.1805.010) *(10-**12**)*
Port 2	FEP tubing M6 for 920 150 cm (6.1805.030) with FEP aspiration tubing (6.1819.100) *(10-**11**)*
Port 3	▪ PTFE capillary (6.1803.030), approx. 20 cm *(10-**10**)* ▪ Pressure screw (6.2744.350) ▪ Coupling (6.2744.080)
Port 4	–

For this step you also need:

- Thread adapter (6.1618.020)
- Dosino holder (6.2057.230)
- Capillary cutter (6.2621.080)

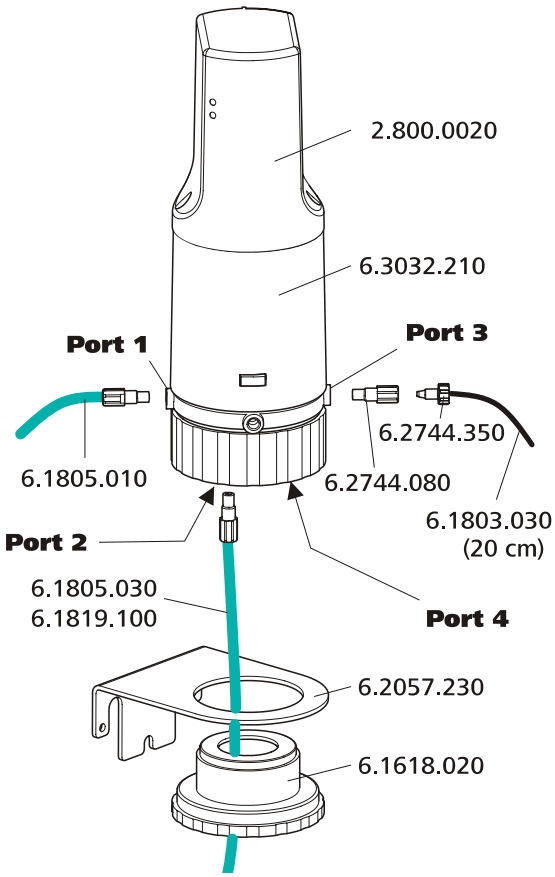

Figure 11 Connect the Dosino for the absorber solution

Connecting port 2

Port 2 is located on the bottom of the Dosino. Port 2 is used for aspirating the absorber solution.

Accessories

The following accessories have to be connected at port 2:

Port	Install this accessory
Port 2	FEP tubing M6 for 920 150 cm (6.1805.030) with FEP aspiration tubing (6.1819.100) *(10-**11**)*

For this step you also need:

- Thread adapter (6.1618.020)
- Dosino holder (6.2057.230)

Mounting the aspiration tubing for the absorber solution to port 2

1 Threading the Dosino holder and thread adapter

Before you can connect the aspiration tubing for the absorber solution, you have to thread the aspiration tubing for the absorber solution through the thread adapter and the Dosino holder.

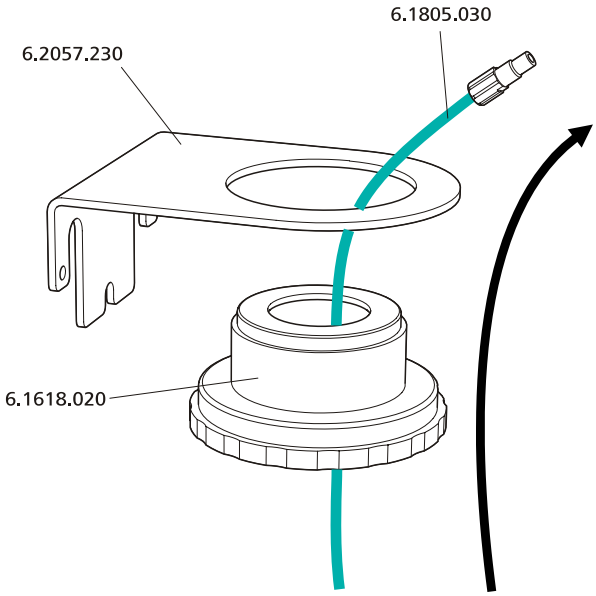

- Start by threading the FEP tubing through the thread adapter from below and then through the Dosino holder.

2 Connecting the FEP tubing to port 2

Tighten the FEP tubing on port 2 of the dosing unit.

3 Routing the FEP tubing out of the instrument

Guide the loose end of the FEP tubing out of the 920 Absorber Module through one of the capillary openings on the back panel of the instrument.

Tightening the Dosino holder on the Dosino for the absorber solution

Prerequisites:

FEP tubing (6.1805.030) is threaded in through the thread adapter (6.1618.020) and the Dosino holder (6.2057.230) and is connected to port 2.

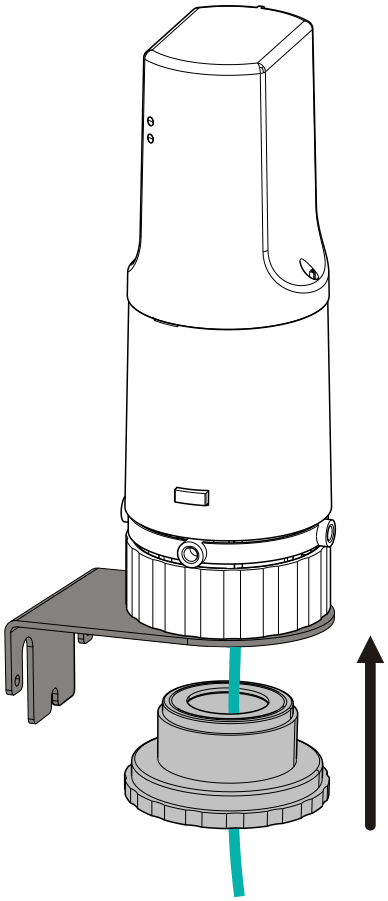

1 Tighten the Dosino holder (6.2057.230) with the thread adapter (6.1618.020) on the bottom of the dosing unit.

Next step Connect the ports 1 and 3.

Connecting port 1 and port 3

Accessories The following accessories have to be connected to these two ports:

Port	Install this accessory
Port 1	FEP tubing M6 for 920, 13 cm (6.1805.010) *(10-**12**)*
Port 3	▪ PTFE capillary (6.1803.030), approx. 20 cm *(10-**10**)* ▪ Pressure screw (6.2744.350) ▪ Coupling (6.2744.080)

Connecting port 1

1 Mounting the FEP tubing

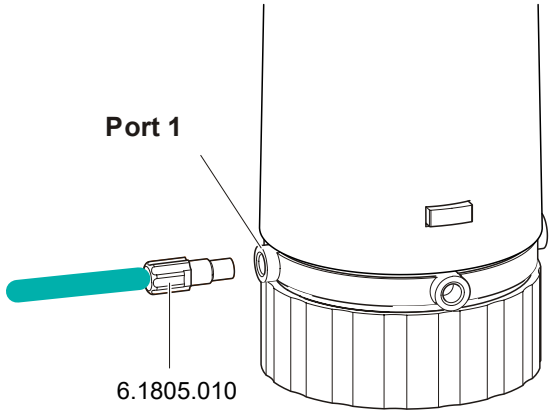

Tighten the FEP tubing on port 1 of the dosing unit.

Connecting port 3

1 Mounting the coupling

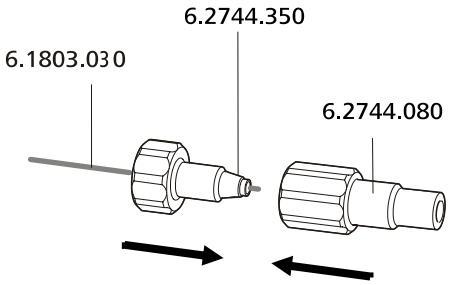

- Push the pressure screw over the end of the PTFE capillary far enough that a few millimeters of the capillary extend beyond the tip of the pressure screw.
- Attach the coupling on the pressure screw and tighten it by hand.

2 Connecting the PTFE capillary

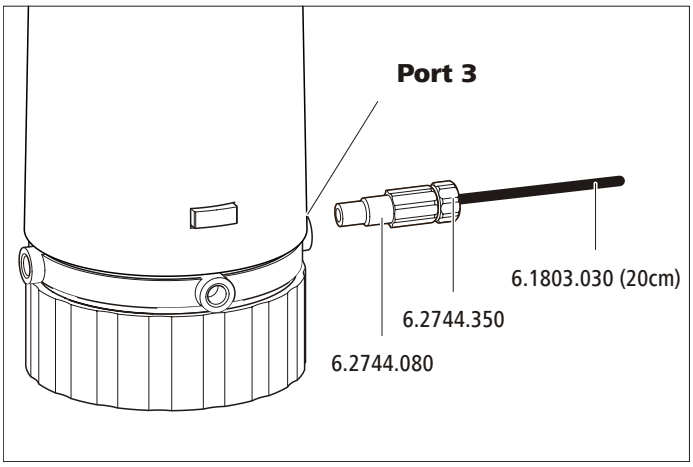

Tighten the coupling to port 3 of the dosing unit.

Next step Placing the Dosino for the absorber solution into the instrument.

4.4.3 Inserting the Dosino in the instrument

CAUTION

Space is limited in the 920 Absorber Module.

When you insert the fully connected Dosino into the instrument, ensure that none of the tubing or capillaries are bent or kinked. Turn the Dosino so that the capillaries and tubing can be as straight as possible.

Inserting the Dosino in the instrument

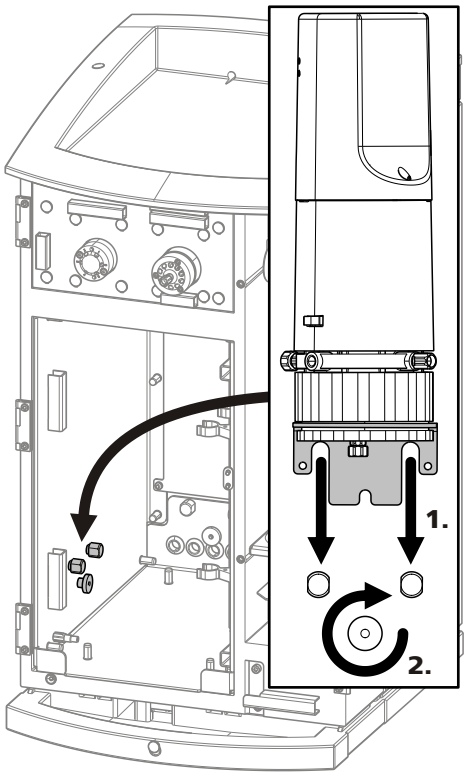

1 Place the Dosino holder onto the mounting bolts and fix it in place using the knurled screw.

Next steps

Connect capillary/ tubing at port …	… to
1	T connector *(see chapter 4.4.4, page 47)*
2	Bottle with the absorber solution *(see chapter 4.4.6, page 53)*
3	Connect the Metrosep A Trap 1 – 100/4.0 inlet *(see chapter 4.4.5, page 49)*

4.4.4 Connecting the T connector

The T connector is connected between the Dosino for ultrapure water, the Dosino for the absorber solution and the transfer tubing.

Accessories

At inlet …	… install this accessory
1	FEP tubing M6 for 920, 13 cm (6.1805.010) from Dosino for absorber solution *(7-**12**)*

At inlet …	… install this accessory
2	FEP tubing M6 for 920, 13 cm (6.1805.010) from Dosino for ultra-pure water *(7-**13**)*
3	Transfer tubing *(4-**2**)*

Installing the T connector

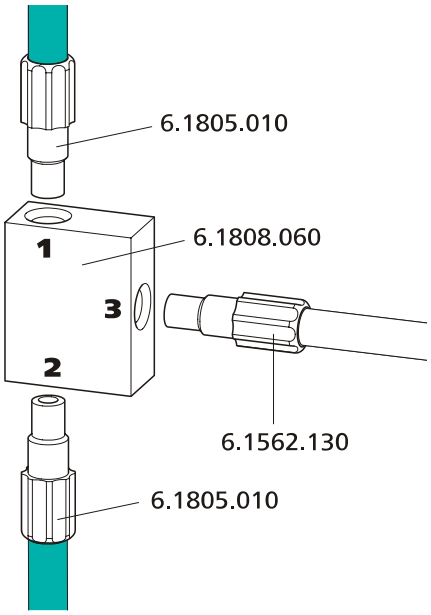

1 Connecting the FEP tubing

Screw the loose end of the FEP tubing connected to port 3 of the Dosino for ultrapure water to an inlet (**1**) on the T connector.

2 Connecting the transfer tubing

Screw the longer end of the transfer tubing to the outlet (**3**) on the T connector.

3 Connecting the FEP tubing

Screw the loose end of the FEP tubing connected to port 1 of the Dosino for the absorber solution to the last inlet (**2**) on the T connector.

Next step

- Connect the transfer tubing to the 10-port valve *(see chapter 4.5.1, page 56)*.

4.4.5 Connecting the Metrosep A Trap 1

The Metrosep A Trap 1 – 100/4.0 (6.1014.000) trap column continues to remove the smallest anionic contaminants in the absorber solution. The use of the trap column ensures that the analysis is not distorted by unwanted contamination.

The Metrosep A Trap 1 – 100/4.0 is inserted between the Dosino for the absorber solution and the T connector CIC (6.7301.210) at the outlet of the Combustion Module (AJ) or the oven outlet (TEI) and the Combustion Oven (TEI).

The …	… is connected to
Inlet	Dosino for the absorber solution
Outlet	Combustion tube outlet on the Combustion Module (AJ) / Combustion Oven (TEI)

Accessories

Connect the following accessories to the trap column:

At the …	… install this accessory
Inlet	▪ Approx. 20 cm of the PTFE capillary (6.1803.030) connected to port 3 of the Dosino for the absorber solution *(10-**10**)* ▪ Pressure screw (6.2744.010) ▪ Colored sleeve, yellow
Outlet	▪ Combustion Module (AJ): PTFE capillary (6.1803.030) ▪ Combustion Oven (TEI): PTFE capillary (Is labeled with "Absorber" and emerges from the rear of the Combustion Oven (TEI).) ▪ Optional: Colored sleeve, yellow

Feeding the capillary for the absorber solution into the instrument (Combustion Module (AJ))

Feed the capillary for the absorber solution into the instrument as follows:

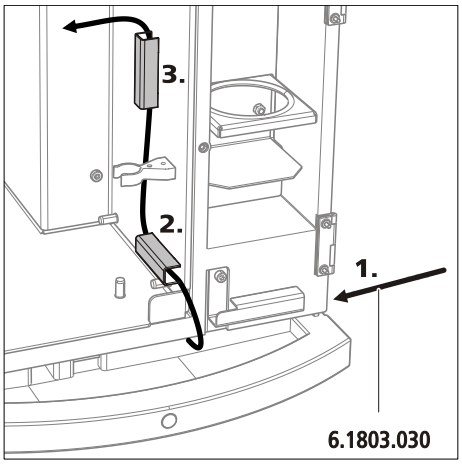

Figure 12 Feeding the capillary for the absorber solution into the instrument

1
- Slide a yellow colored sleeve over the capillary far enough that it remains visible outside the instrument.
- Route one end of the PTFE- capillary (6.1803.030) to the front of the instrument from the right side of the instrument through the capillary feed-through between the base tray and the 920 Absorber Module.
- Thread the end of the capillary through the bottom horizontal capillary guide on the right inner side wall and then through the vertical capillary guide from the bottom to the top.
- Optional: Fasten another yellow colored sleeve to the end of the capillary.

Feeding the capillary for the absorber solution into the instrument (Combustion Oven (TEI))

Feed the capillary for the absorber solution into the instrument as follows:

1
- Slide a yellow colored sleeve over the capillary far enough that it remains visible outside the instrument.
- Route one end of the PTFE capillary that emerges from the rear of the Combustion Oven (TEI) and is labeled with "Absorber" to the front of the instrument from the back or from the left side of the instrument through the capillary feed-through between the base tray and the 920 Absorber Module.
- Optional: Fasten another yellow colored sleeve to the end of the capillary.

Connecting the Metrosep A Trap 1 – 100/4.0

NOTE

The trap column is sealed with threaded stoppers at both ends.

Remove these threaded stoppers before connecting the capillaries.

CAUTION

Flow can only move through the trap column in one direction. This flow direction is marked on the column with an engraved arrow.

Be absolutely sure to note this flow direction when connecting the capillaries.

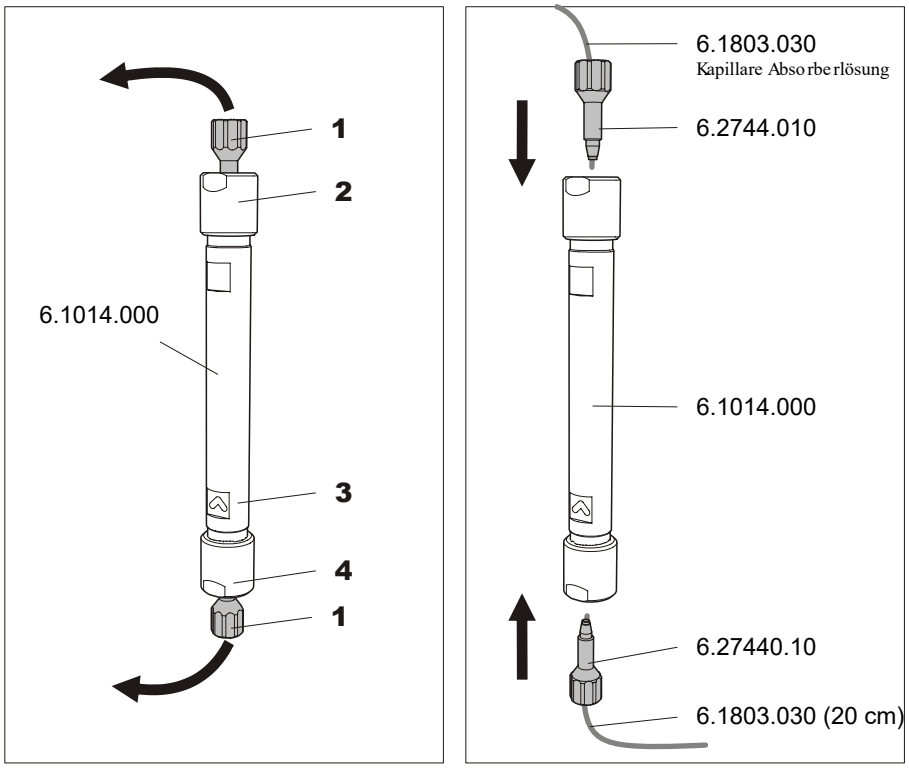

1	**Threaded stopper**	**2**	**Column outlet**
3	**Flow direction indicator**	**4**	**Column inlet**

1 Removing the threaded stoppers

Remove the threaded stoppers at the inlet and outlet of the Metrosep A Trap 1 – 100/4.0.

2 Connecting the column's inlet

- Screw the loose end of the PTFE capillary connected to port 3 of the Dosino for the absorber solution in place on the inlet of the trap column using a pressure screw (6.2744.010).

3 Connecting the column's outlet to the Combustion Module (AJ)

- Screw the PTFE capillary (6.1803.030) with the yellow colored sleeve (fed in from the right side of the instrument) in place on the trap column's outlet using a pressure screw (6.2744.010).

Connecting the column's outlet to the Combustion Oven (TEI)

- Shorten the PTFE capillary with the yellow colored sleeve (fed in from the rear or from the left side of the instrument) to the required length with a capillary cutter and screw it in place on the trap column's outlet using a pressure screw (6.2744.010).

Inserting the trap column in the instrument

Insert the Metrosep A Trap 1 – 100/4.0 in the instrument as follows:

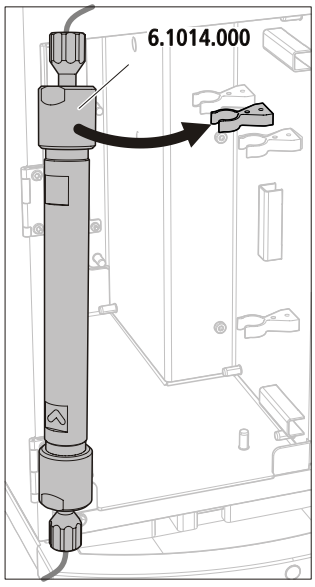

1 Fasten the Metrosep A Trap 1 – 100/4.0 in place in the front holding bracket *(4-**4**)* of the 920 Absorber Module using the column head.

Next step

Combustion Module (AJ): Connect the loose end of the PTFE capillary 0.5 mm ID / 3 m (6.1803.030) to the outlet of the Combustion Module (AJ) *(see chapter 4.11.2, page 79)*.

Combustion Oven (TEI): The other end is already connected to the oven outlet.

4.4.6 Connecting the bottle with the absorber solution

The bottle with the absorber solution is connected to port 2 of Dosino 1.

Accessories

For this step you need:

- Clear glass bottle 2 L (6.1608.070) filled with the absorber solution
- Bottle cap (6.1602.160)
- FEP tubing M6 for 920, 150 cm (6.1805.030) fastened to port 2 of the Dosino for the absorber solution.
- Adsorber tube (6.1609.000)
- Cotton

- Adsorber granulate

Connecting the bottle with the absorber solution

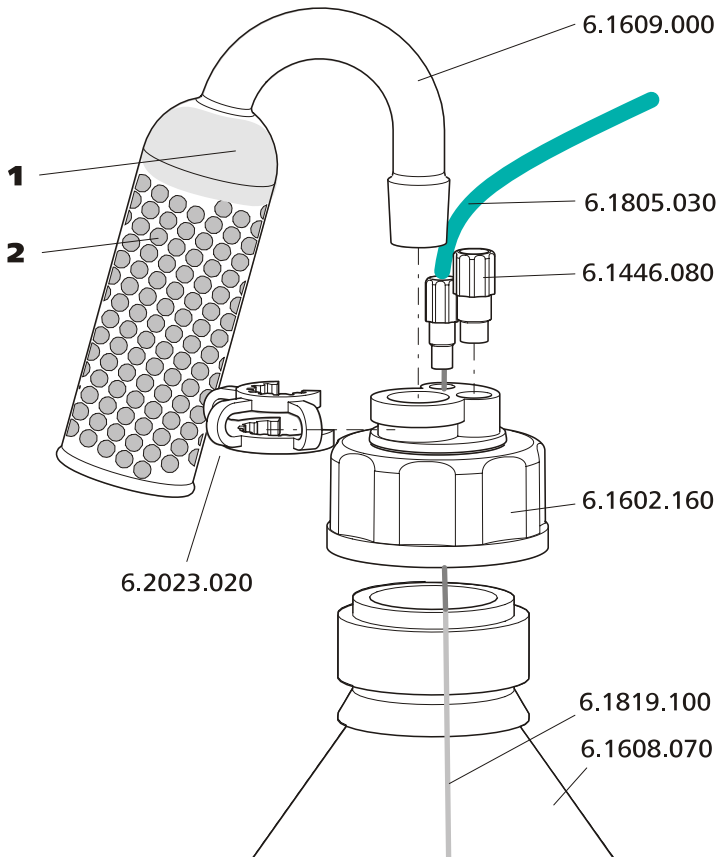

1	Cotton	2	Adsorber granulate

1 Screw the bottle cap onto the bottle.

2 Insert a sealing ring from the 6.1602.160 accessory set into the bottle cap's M6 opening.

Put the loose end of the FEP tubing through the bottle cap's M6 opening and tighten it.

NOTE

The end of the aspiration tubing has to reach to the bottom of the bottle.

3 Fill the adsorber tube with a little cotton and adsorber granulate and seal it with the plastic cover.

4 Place the adsorber tube into the large opening of the bottle cap and fasten it in place with the SGJ clip.

5 Seal the M8 opening with a stopper.

4.5 10-port-valve

The 10-port valve can be connected after both Dosinos and the two trap columns have been installed.

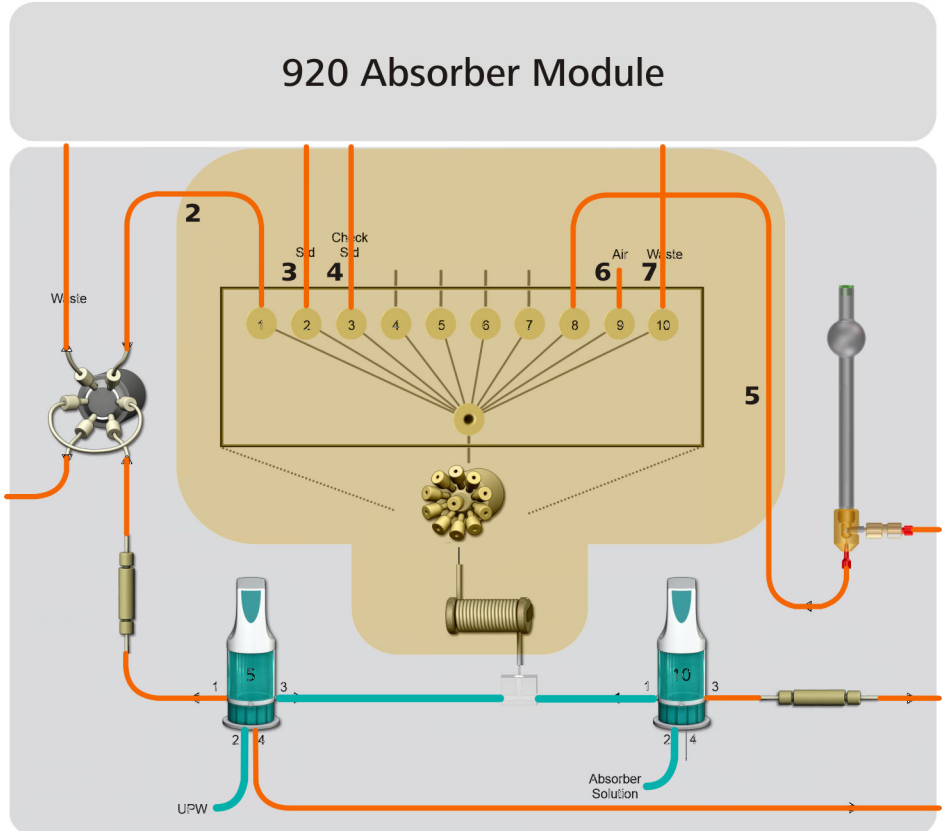

Figure 13 Connecting the 10-port valve

2	**PEEK capillary, 0.5 mm ID / 15 cm (6.1831.040)** Connection between the 6-port valve and the 10-port valve.
3	**PTFE capillary, 0.75 mm ID / 3 m (6.1803.160)** Approx. 80 cm. Connection between the 10-port valve and the bottle with the standard solution.

4	**PTFE capillary, 0.75 mm ID / 3 m (6.1803.160)** Approx. 80 cm. Connection between the 10-port valve and the bottle with the check standard.
5	**PTFE capillary, 0.75 mm ID / 3 m (6.1803.160)** Approx. 60 cm. Connection between the 10-port valve and the absorber tube.
6	**PTFE capillary, 0.75 mm ID / 3 m (6.1803.160)** Approx. 5 cm. For aspirating air segments.
7	**PTFE capillary, 0.75 mm ID / 3 m (6.1803.160)** Connection between the 10-port valve and the waste container.

4.5.1 Connecting the ports

The transfer tubing and capillaries for all of the liquids being used are connected to the 10-port valve.

Connectors

The ports of the 10-port valve are used as follows:

Port …	… is used for …	… is connected to
Central	Aspirating and discharging different solutions	Transfer tubing
1	Outlet for sample, standard solution, check standard	6-port valve
2	Inlet for standard solution	Bottle with standard solution
3	Inlet for check standard	Bottle with check standard
4-7	Not used	–
8	Inlet for sample	Absorber tube
9	Aspirating air segments	–
10	Outlet for waste	Waste container

Accessories

The following accessories have to be connected to the 10-port valve:

Port	Install this accessory
Central	▪ Adapter UNF 10/32 outer / M6 inner (6.2744.200) ▪ Transfer tubing (6.1562.130)
1	▪ PEEK capillary, 0.5 mm ID / 15 cm (6.1831.040) *(13-**2**)* ▪ Pressure screw (6.2744.090)
2	▪ PTFE capillary, 0.75 mm ID / 3 m (6.1803.160), approx. 80 cm *(13-**3**)* ▪ Pressure screw (6.2744.090)
3	▪ PTFE capillary, 0.75 mm ID / 3 m (6.1803.160), approx. 80 cm *(13-**4**)* ▪ Pressure screw (6.2744.090)
4-7	Threaded stopper (6.2744.220)

Port	Install this accessory
8	▪ PTFE capillary, 0.75 mm ID / 3 m (6.1803.160), approx. 60 cm *(13-**5**)* ▪ Pressure screw (6.2744.090)
9	▪ PTFE capillary, 0.75 mm ID / 3 m (6.1803.160), approx. 5 cm *(13-**6**)* ▪ Pressure screw (6.2744.090)
10	▪ PTFE capillary, 0.75 mm ID / 3 m (6.1803.160) *(13-**7**)* ▪ Pressure screw (6.2744.090)

Connecting the 10-port valve

Connect the ports of the 10-port valve according to the following figure:

NOTE

We recommend connecting the central port first.

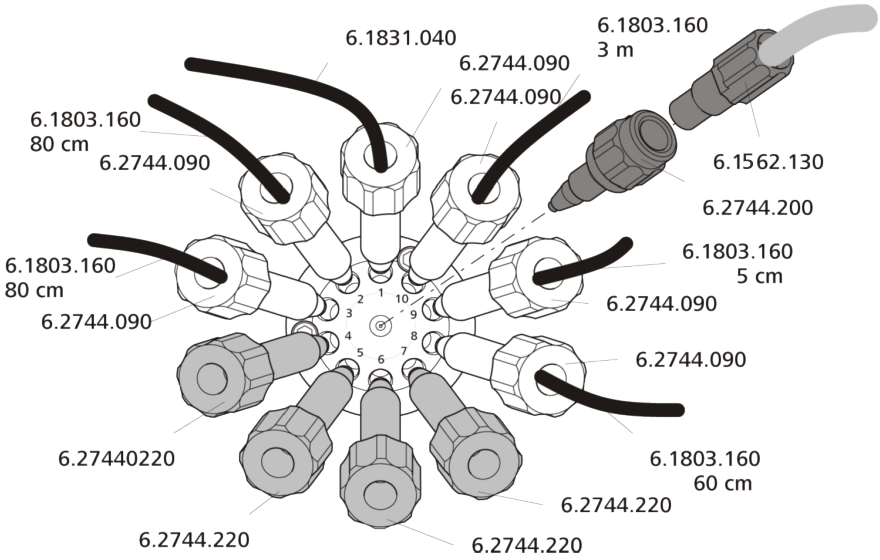

Figure 14 Connecting the 10-port valve

1 Connecting the central port

- Screw the adapter in place in the central port.
- Screw one end of the transfer tubing in place on the adapter.

2 Connecting port 1

- Screw the PEEK capillary to port 1 using a long pressure screw.

3 Connecting port 2

- Cut off a piece from the PTFE capillary, 0.75 mm ID / 3 m (6.1803.160) that is approx. 80 cm long using the capillary cutter.
- Screw this piece of capillary in place at port 2 using a long pressure screw.

4 Connecting port 3

- Cut off a piece from the PTFE capillary, 0.75 mm ID / 3 m (6.1803.160) that is approx. 80 cm long using the capillary cutter.
- Screw this piece of capillary in place at port 3 using a long pressure screw.

5 Sealing ports 4 through 7

Ports 4 through 7 are not used.

- Seal each of ports 4, 5, 6 and 7 with a threaded stopper.

6 Connecting port 8

- Cut off a piece from the PTFE capillary, 0.75 mm ID / 3 m (6.1803.160) that is approx. 60 cm long using the capillary cutter.
- Screw this piece of capillary in place at port 8 using a long pressure screw.

7 Connecting port 9

- Cut off a piece from the PTFE capillary, 0.75 mm ID / 3 m (6.1803.160) that is approx. 5 cm long using the capillary cutter.
- Screw this piece of capillary in place at port 9 using a long pressure screw.

8 Connecting port 10

- Screw an entire PTFE capillary, 0.75 mm ID / 3 m (6.1803.160) in place at port 10 using a long pressure screw.

Next step

Connect capillary/ tubing at port …	… to
1	6-port valve *(see chapter 4.6, page 62)*
2	Bottle with standard solution *(see chapter 4.5.2, page 59)*
3	Bottle with check standard *(see chapter 4.5.3, page 60)*
8	Absorber tube *(see chapter 4.7, page 68)*

Connect capillary/ tubing at port …	… to
10	Waste container

4.5.2 Connecting the bottle with the standard solution

The bottle with the standard solution is connected to the 10-port valve.

Accessories

For this step you need:

- Clear glass bottle 100 mL (6.1608.050) filled with standard solution
- Bottle attachment (6.1602.150), contains 3 pressure screws

Connecting the bottle with the standard solution

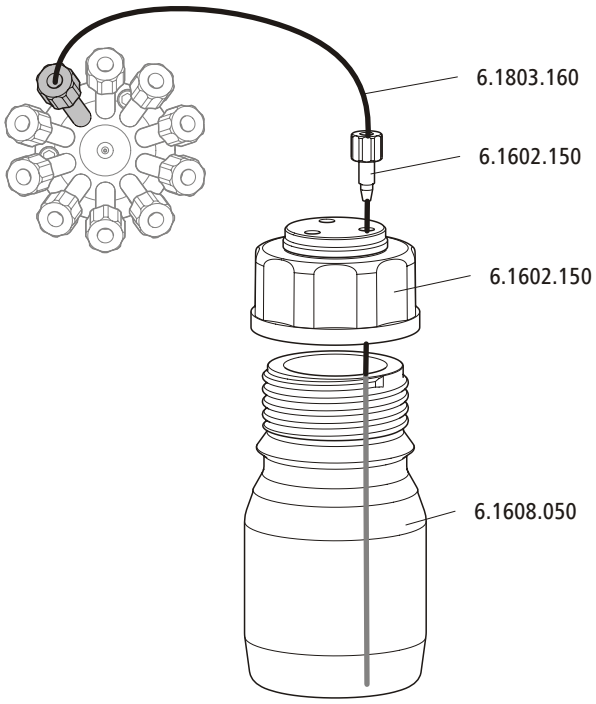

1 Connecting the aspirating capillary for the standard solution

- Slide a pressure screw over the loose end of the capillary connected to port 2 of the 10-port valve *(13-**3**)*.
- Thread the capillary through one of the three openings on the bottle attachment.
- Screw the bottle attachment onto the bottle.
- Push the capillary far enough into the bottle that it reaches the bottom of the bottle. Then fix it in place with a pressure screw.

Inserting the bottle with the standard solution into the instrument

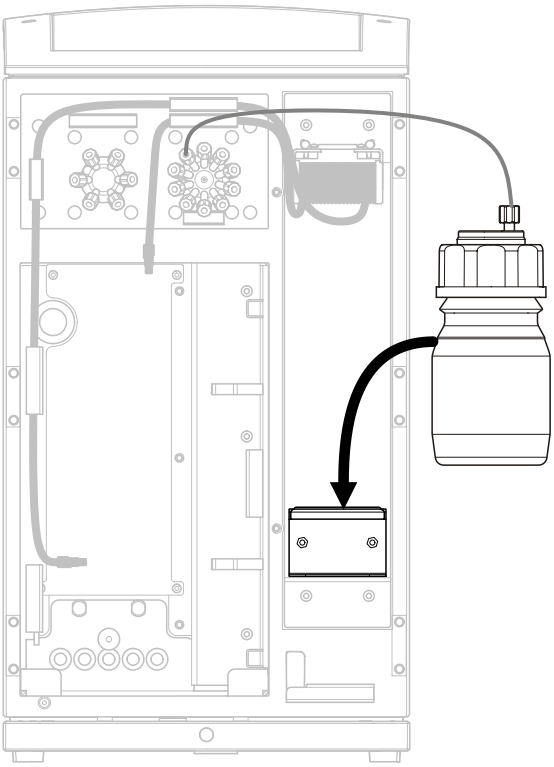

1 Insert the bottle with the standard solution into the bottle holder.

4.5.3 Connecting the bottle with the check standard

The bottle with the standard solution is connected to the 10-port valve.

Connecting the bottle with the check standard

1 Guide the loose end of the capillary *(13-**4**)* (connected to port 3 of the 10-port valve) in through a capillary feed-through between the device and the bottle holder on the side of the instrument.

2 Fasten the capillary in the bottle containing the check standard.

Place the bottle on the bottle holder.

4.5.4 Function of the 10-port valve

The 10-port valve is used for sample preparation. For this, the central port *(15-**2**)* can be connected to the other ten ports one after the other using the selector *(15-**1**)*.

The transfer tubing is connected to the central port. Liquids can be aspirated into the transfer tubing by one of the ten ports with the aid of a Dosino and then transported to any other port by reversing the flow.

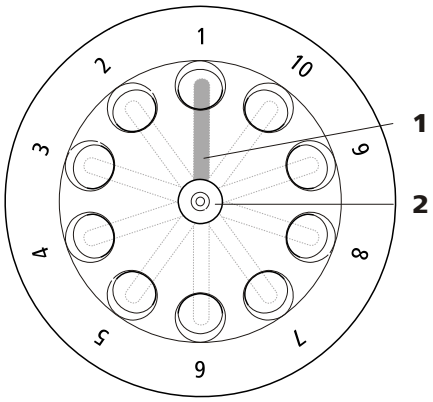

Figure 15 10-port valve – Ports

1 Selector Can be rotated for selecting the active port.	**2 Central port** Connected to the transfer tubing.

The selector can rotate in a clockwise or counterclockwise direction. Normally, the shortest path is selected when switching over to a new port.

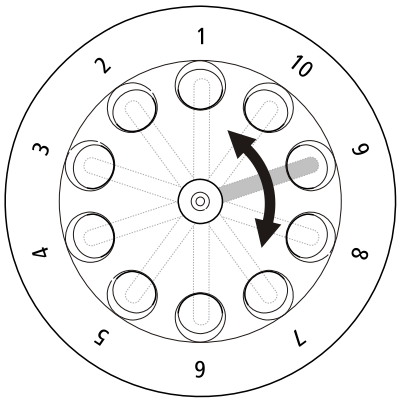

Secured ports

In order to avoid contamination, any given port can be defined as "secured". The secured port is moved to during switching only if it is the target of the switching procedure.

If the secured port lies along the shortest route during a valve switchover, then the longer path will automatically be selected.

Example: Switching from port 10 to port 7.

The shorter path leads through ports 9 and 8 *(see figure 16, left)*. However port 8 is defined as the secured port, then the 10-port valve automatically switches via ports 1 – 2 – 3 – 4 – 5 – 6 *(see figure 16, left)*.

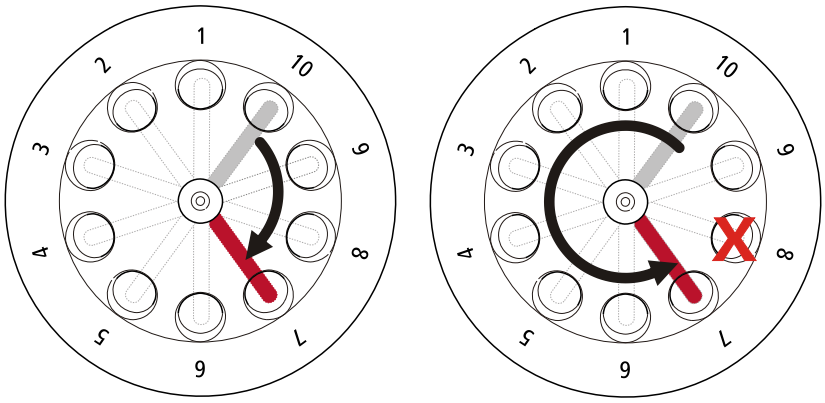

Figure 16 10-port valve – Normal valve switchover and with a secured port

4.6 6-port valve

The 6-port valve is connected next.

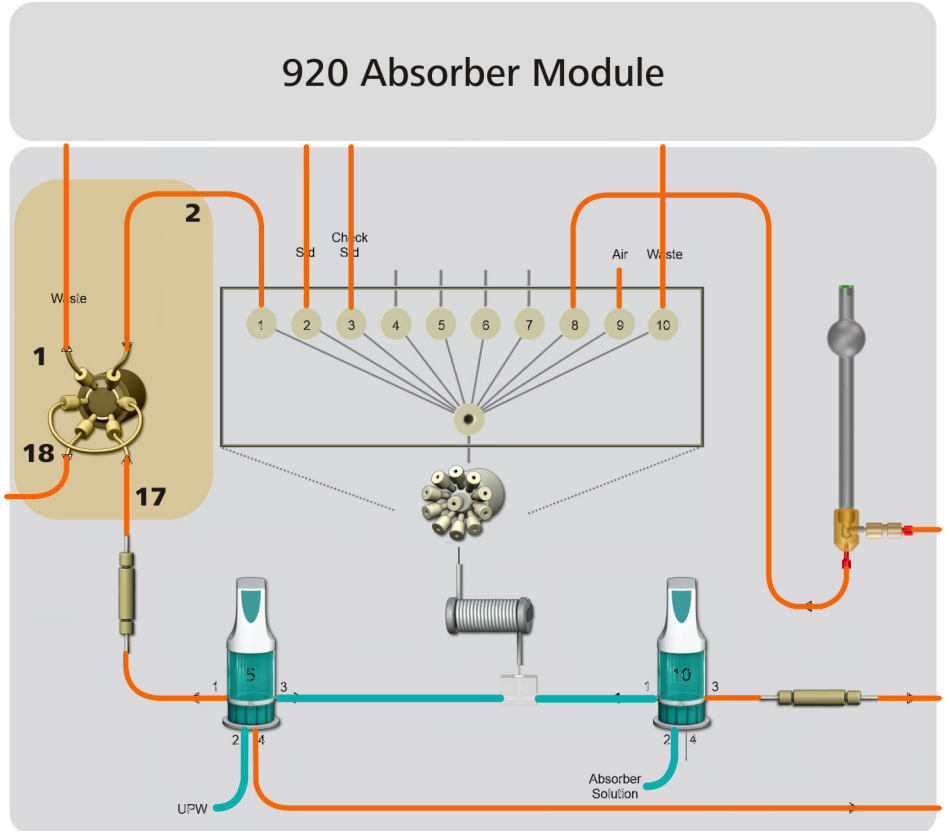

Figure 17 Connecting the 6-port valve

1 **PTFE capillary, 0.75 mm ID / 3 m (6.1803.160)** Connection between the 6-port valve and the waste container.	**2** **PEEK capillary, 0.5 mm ID / 15 cm (6.1831.040)** Connection between the 6-port valve and the 10-port valve.
17 **PTFE capillary, 0.5 mm ID / 3 m (6.1803.030)** Approx. 40 cm. Connection between the Metrosep I Trap 1 - 100/4.0 trap column (6.1014.200) and the 6-port valve.	**18** **PTFE capillary, 0.5 mm ID / 3 m (6.1803.030)** Connection between the 6-port valve and the 930 Compact IC Flex.

4.6.1 Connecting the ports

Connectors The ports of the 6-port valve are connected as follows:

Port …	… is used for …	… is connected to
1	Inlet for sample, standard solution and check standard	10-port valve
2	Outlet for waste	Waste container
3	Sample loop	6-port valve – Port 6
4	Outlet for sample, standard solution and check standard	Injection valve in the IC instrument

Port …	… is used for …	… is connected to
5	Inlet for transfer water	Metrosep I Trap 1 – 100/4.0 (6.1014.200)
6	Sample loop	6-port valve – Port 3

Accessories

Port	Install this accessory
1	▪ PEEK capillary, 0.5 mm ID / 15 cm (6.1831.040) *(17-**1**)* ▪ Pressure screw (6.2744.010)
2	▪ PTFE capillary, 0.75 mm ID / 3 m (6.1803.160) *(17-**1**)* ▪ Pressure screw (6.2744.010)
3	▪ Sample loop 250 µL (6.1825.290) ▪ Pressure screw (6.2744.010)
4	▪ PTFE capillary, 0.5 mm ID / 3 m (6.1803.030) *(17-**18**)* ▪ Pressure screw (6.2744.010)
5	▪ PTFE capillary, 0.5 mm ID / 3 m (6.1803.030), approx. 40 cm *(17-**17**)* ▪ Pressure screw (6.2744.010)
6	▪ Sample loop 250 µL (6.1825.290) ▪ Pressure screw (6.2744.010)

Connecting the 6-port valve

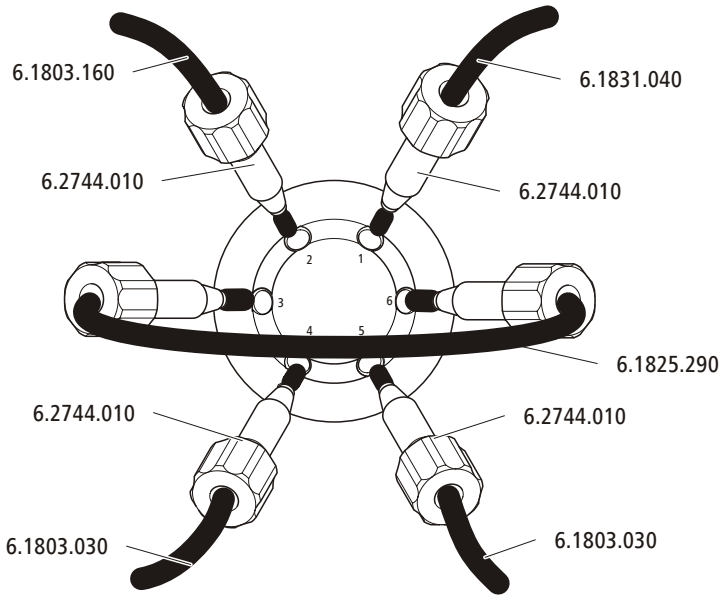

Figure 18 Connecting the 6-port valve

1 Connecting port 1

- Tighten the loose end of the PEEK capillary connected to port 1 of the 10-port valve *(17-**2**)* to port 1 of the 6-port valve using a pressure screw.

2 Connecting port 2

- Push one end of the PTFE capillary, 0.75 mm ID / 3 m (6.1803.160), *(17-**1**)* through a capillary feed-through below the bottle holder from the back towards the front of the instrument.
- Push the pressure screw over the end of the PTFE capillary far enough that approx. 4 mm of the capillary is exposed.
- Screw the pressure screw in place at port 2 of the 6-port valve.
- Shorten the other end of the capillary using a capillary cutter so that it reaches the waste container.
- Fasten the end to the waste container.

3 Connecting port 4

- Push one end of the PTFE capillary, 0.5 mm ID / 3 m (6.1803.030), *(17-**18**)* through the cable feed-through at the bottom left on the front of the instrument and then route it up to the 6-port valve through the two capillary guides on the left inside the instrument.
- Push the pressure screw over the end of the capillary far enough that approx. 4 mm of the capillary is exposed.

- Screw the pressure screw in place at port 4 of the 6-port valve.

4 Connecting port 5

- Push the pressure screw over the loose end of the capillary connected to the outlet of the Metrosep I Trap 1 – 100/4.0 *(17-**17**)* far enough that approx. 4 mm of the capillary is exposed.
- Screw the pressure screw in place at port 5 of the 6-port valve.

5 Connecting the sample loop

- Push the pressure screws far enough over both ends of the sample loop that approx. 4 mm of the loop is exposed.
- Tighten the one pressure screw at port 3.
- Tighten the second pressure screw at port 6.

4.6.2 Mode of operation of the 6-port valve

A sample loop is installed on the 6-port valve; it is used for measuring the sample amount before it is transferred to the analyzer.

Ports

As its name implies, the 6-port valve has six ports.

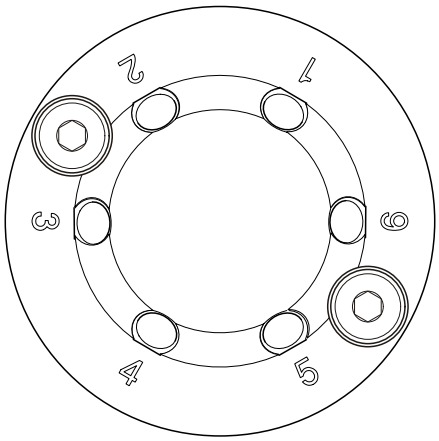

Figure 19 6-port valve – Ports

1 **Port 1** Connected to the 10-port valve. Used as the inlet for the sample and the standard solution and check standard.	**2** **Port 2** For connecting the capillary to the waste container.

3	**Port 3** For connecting the sample loop.	**4**	**Port 4** For connecting the capillary to the ion chromatograph.
5	**Port 5** For connecting the capillary from the outlet of the Metrosep I trap column.	**6**	**Port 6** For connecting the sample loop.

Valve positions

The 6-port valve can have two valve position:

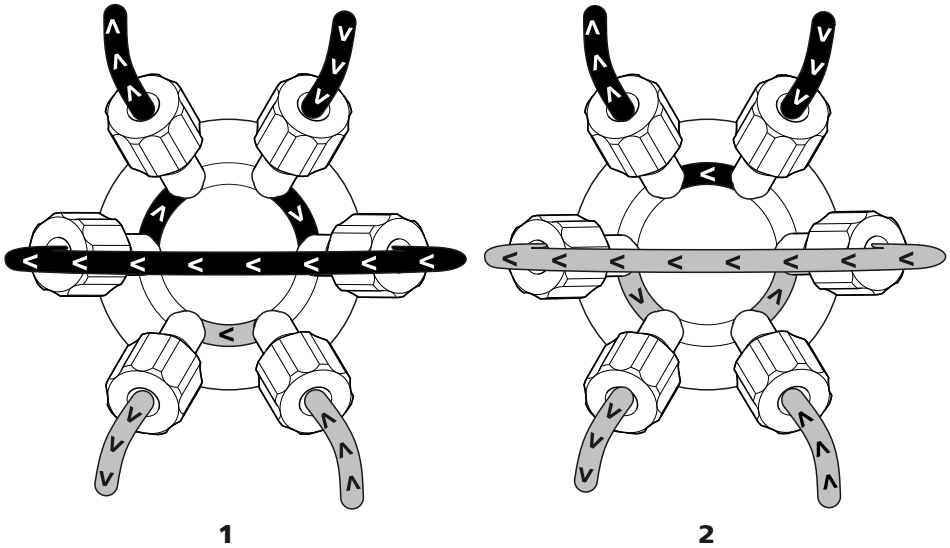

Figure 20 6-port valve – Valve positions

1	**Filling**	**2**	**Injecting**

- **Filling**
  In the **Filling** position, ports 2 and 3, 4 and 5, and 6 and 1 are connected to each other.
  The sample flows through port 1 into the 6-port valve, through the sample loop and through port 2 out of the 6-port valve into the waste container.
  At the same time, the transfer solution flows through port 5 into the 6-port valve and directly back out through port 4.
  The sample loop is filled with the sample at this valve position.
- **Injecting**
  In the **Injecting** position, ports 1 and 2, 3 and 4, and 5 and 6 are connected to each another.
  The transfer solution now flows through port 5 into the 6-port valve, through the sample loop and back out through port 4. At the same time, the absorber solution flows through port 1 into the 6-port valve and directly back out through port 2.
  In this valve position, the absorber solution in the sample loop is flushed to the analyzer together with the transfer solution.

4.7 Absorber tube

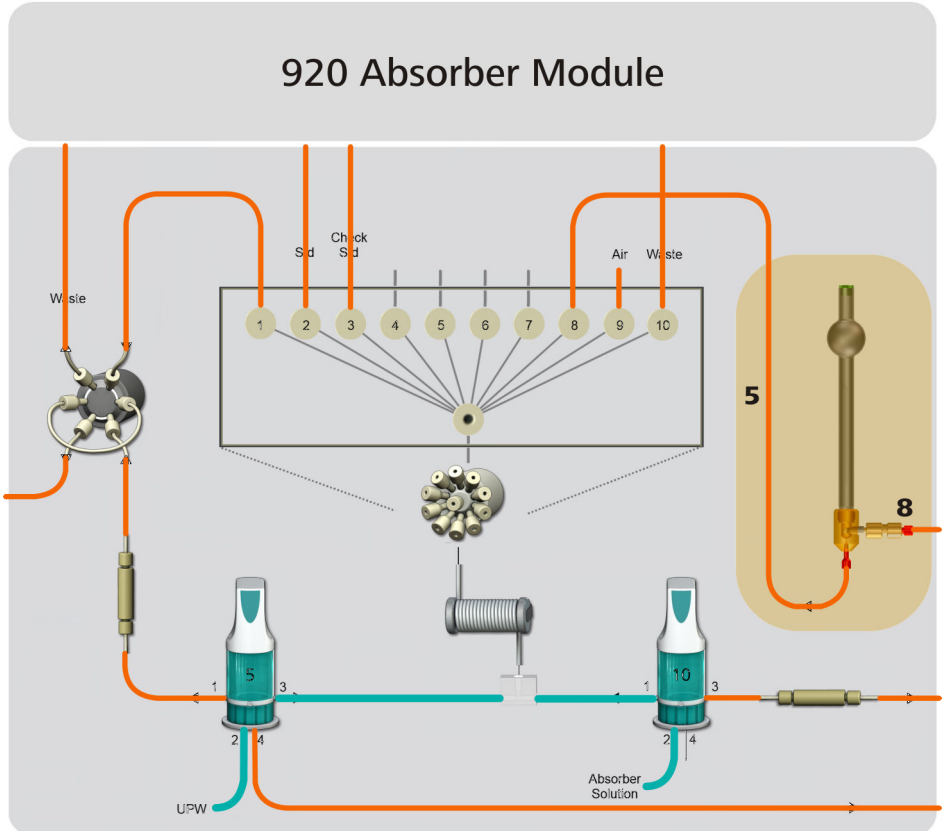

Figure 21 Connect the absorber tube

5 **PTFE capillary, 0.75 mm ID / 3 m (6.1803.160)** Approx. 60 cm. Connection between the 10-port valve and the absorber tube.	**8** **Combustion Module (AJ): PTFE capillary 1/8 OD / 1/16 ID / 1.5 m | Combustion Oven (TEI): PTFE capillary 1/8 OD / 1/16 ID / 5 m** Connection between the absorber tube and the Combustion Module (AJ) / Combustion Oven (TEI). Combustion Oven (TEI): The capillary is already installed at the oven outlet and is labeled with "Combustion Gas".

The absorber tube is connected between the Combustion Module (AJ) / Combustion Oven (TEI) and the 10-port valve.

Accessories

The following accessories have to be connected to the absorber tube:

On the … of the absorber tube	… install this accessory
top	Stopper
bottom	Absorber tube holder (6.2766.000) consisting of the holder and a sealing ring

Assembling the absorber tube

Assemble the absorber tube according to the following figure:

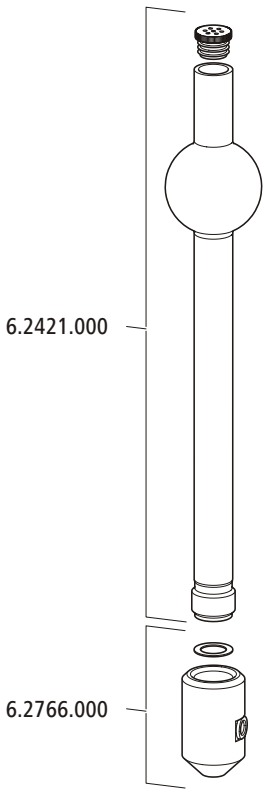

1 Assembling the absorber tube holder

- Place the sealing ring in the holder.
- Screw the holder in place on the bottom end of the absorber tube.
- Check whether the stopper is in place at the upper end of the absorber tube.

The following capillaries have to be fastened to the assembled absorber tube.

On the … of the absorber tube	… install this accessory
side	▪ Inlet valve holder (6.2766.010) consisting of a holder and a nut with inlet valve (6.2824.170) ▪ PTFE capillary 1/8 / 1/16 ID / 1.5 m (6.1803.130) *(21-**8**)* – is already installed at the oven outlet and is labeled with "Combustion Gas"
bottom	▪ Pressure screw (6.2744.010) ▪ The loose end of the PTFE capillary 0.75 mm ID / 3 m (6.1803.160), connected to port 8 of the 10-port valve *(21-**5**)*.

Connecting the capillaries

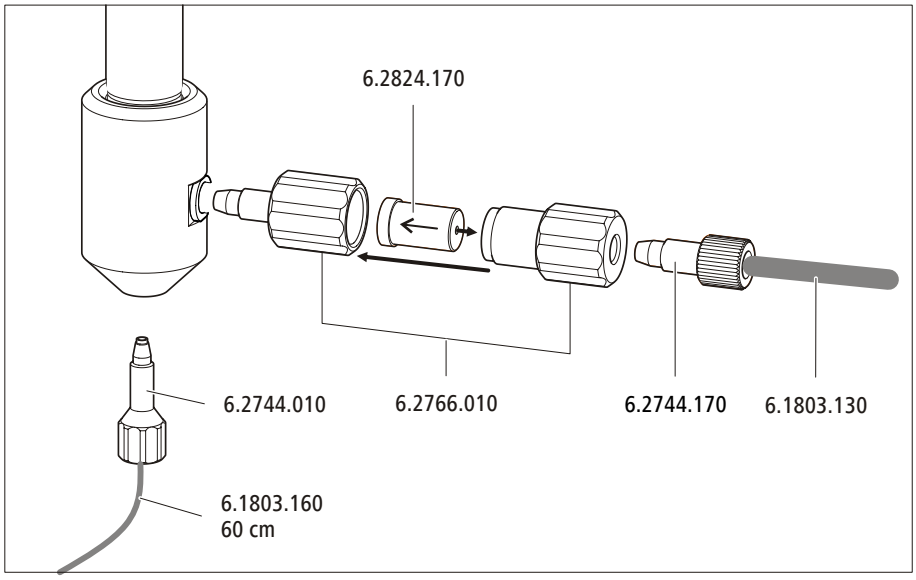

1 Installing the check valve

- Insert the inlet valve into the holder for the inlet valve.
- Tighten the nut on the holder by hand.
- Screw the check valve in place on the frit of the holder.

2 Mounting the input capillary

Screw the thicker PTFE capillary *(21-**8**)* in place on the check valve using a pressure screw (6.2744.170). Combustion Oven (TEI): The PTFE capillary emerges from the back of the oven and must be shortened to the required length with a capillary cutter.

3 Mounting the outlet capillary

Tighten the loose end of the capillary *(21-**5**)* (connected to port 8 of the 10-port valve) to the bottom of the absorber tube holder using a pressure screw (6.2744.010).

Inserting the absorber tube into the instrument

Insert the absorber tube into the instrument:

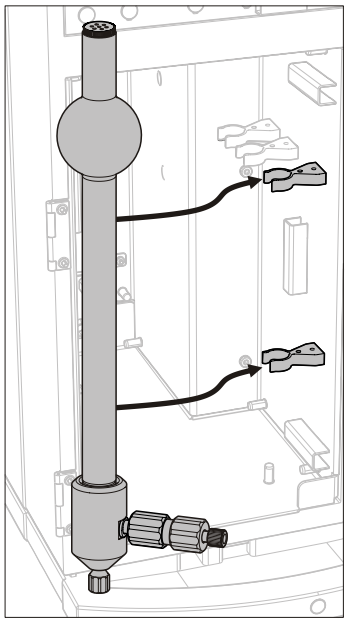

1 Hang the absorber tube on the two brackets on the right inner side wall.

Next steps

Connect the Capillary/ tubing at …	… to
side	Secure the outlet of the combustion oven *(see chapter 4.11.2, page 79)*

4.8 Connecting the drainage tubing and leak sensor

The leak sensor detects leaking liquid that collects in the instrument's base tray. Liquid that leaks in the bottle holder or in the detector chamber is conveyed to the base tray using drainage tubing and is detected there.

If the leak sensor detects a leak in the IC system, the IC instrument is switched off. The software displays a warning.

The leak sensor functions properly only if the following preconditions are met:

- The drainage tubing is connected.
- The leak sensor connection cable is inserted into the leak sensor connection socket.
- The Combustion-IC-System is switched on.
- The leak sensor is switched to **active** in the software.

4.8.1 Installing the drainage tubing

Liquid that leaks in the bottle holder flows to the rear of the instrument and is drained through an opening on the bottle holder. Drainage tubing has to be mounted at this opening. This drainage tubing conveys the leaking liquid to the base tray where the leak sensor is located.

Accessories

For this step you need the following parts from the accessory kit: Vario/Flex Basic (6.5000.000):

- 2 × silicone tubing (6.1816.080)

You also need scissors.

Connecting the drainage tubing

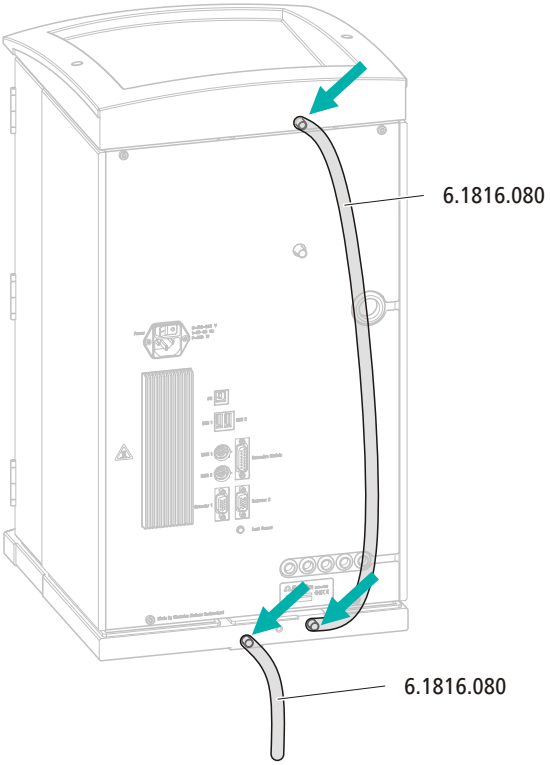

1. Attach one end of the silicone tubing to the drainage support on the bottle holder.

   Attach the other end of the silicone tubing to the right-side drainage support on the base tray.

2. Attach one end of the second piece of silicone tubing to the left-side drainage tubing connection on the base tray.

   Route the loose end into a waste container.

4.8.2 Connecting the leak sensor

Plugging in the leak sensor connection cable

The leak sensor connection cable is coiled up in the base tray.

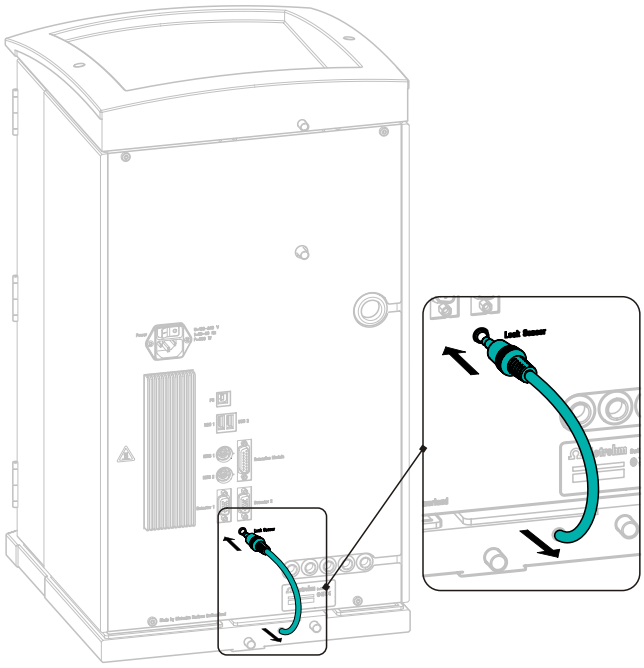

1 Pull the leak sensor connection cable out of the base tray as far as needed.

2 Plug the plug for the leak sensor connection cable into the leak sensor connection socket (labeled **Leak Sensor**).

4.9 Connecting the instrument to a computer

NOTE

If the instrument is connected to the computer, then it must be switched off.

Accessories

For this step, you need the following accessories:

- USB connecting cable (6.2151.020)

Connecting the USB cable

1 Insert the USB cable into the computer connection socket on the rear of the instrument labeled *PC*.

2 Insert the other end into a USB port on the computer.

4.10 Connecting the instrument to the power grid

WARNING

Electric shock from electrical potential

Risk of injury by touching live components or through moisture on live parts.

- Never open the housing of the instrument while the power cord is still connected.
- Protect live parts (e.g. power supply unit, power cord, connection sockets) against moisture.
- Unplug the power plug immediately if you suspect that moisture has gotten inside the instrument.
- Only personnel who have been issued Metrohm qualifications may perform service and repair work on electrical and electronic parts.

Connecting the power cord

Accessories

Power cord with the following specifications:

- Length: max. 2 m
- Number of cores: 3, with protective conductor
- Instrument plug: IEC 60320 type C13
- Conductor cross-section 3x min. 0.75 mm^2 / 18 AWG
- Power plug:
  - according to customer requirement (6.2122.XX0)
  - min. 10 A

NOTE

Do not use a not permitted power cord!

1 Plugging in the power cord

- Plug the power cord into the instrument's power socket.
- Connect the power cord to the power grid.

4.11 Connecting the 920 Absorber Module to the remaining components

Combustion Module (AJ)

Three capillaries are routed out at the right side of the Combustion-IC-System.

- The capillary connected to port 4 of the Dosino for ultrapure water is marked with a blue colored sleeve.
- The capillary connected to the outlet of the Metrosep A Trap 1 – 100/4.0 is marked with a yellow colored sleeve.
- The thicker capillary installed at the inlet of the absorber tube is routed out under the door.

Combustion Oven (TEI)

Three capillaries are routed out at the back and/or left side of the Combustion Oven (TEI).

- The capillary connected to port 4 of the Dosino for ultrapure water is marked with a blue colored sleeve. The capillary is part of 6.07311.310. The other end of the capillary is already connected.
- The capillary connected to the outlet of the Metrosep A Trap 1 – 100/4.0 is marked with a yellow colored sleeve. The other end of the capillary is already connected to the oven outlet.
- The thicker capillary installed at the inlet of the absorber tube is routed out at the rear. The other end of the capillary is already connected to the oven outlet.

4.11.1 Connecting the Combustion Module (AJ) inlet: water infeed

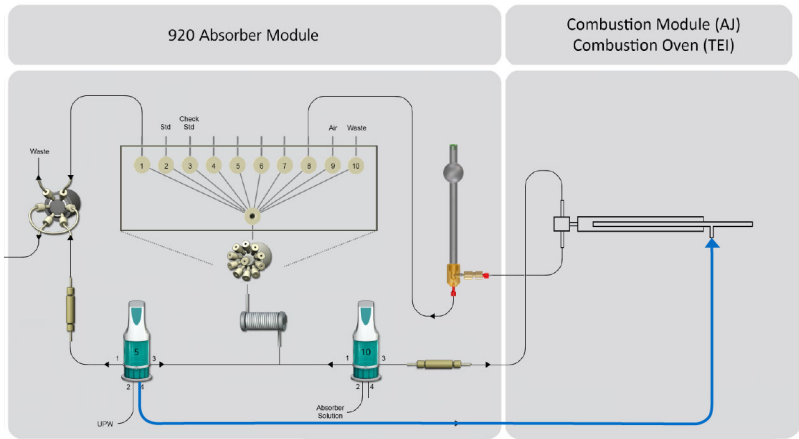

Connecting the capillary for the water infeed at the inlet of the combustion tube

1 Feeding the capillary into the Combustion Module (AJ)

Feed the capillary with the blue colored sleeve into the inside through the round opening up on the left side wall of the Combustion Module (AJ) and route it to the right side of the Combustion Module (*see Chapter "Installing the Combustion Module after transportation or storage" in the Combustion Module operating instructions*).

2 Shortening the capillary

Shorten the capillary using the capillary cutter so that it can be connected to the combustion tube's inlet easily.

3 Connecting the capillary

Three connections are located at the combustion tube's inlet:

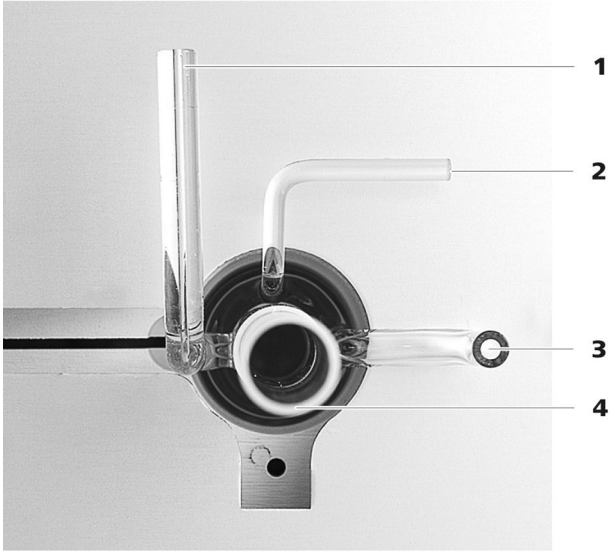

Figure 22 Combustion tube – Inlet

1	**Water infeed inlet** Connection for the capillary with the blue colored sleeve *(7-**14**)*.	**2**	**Flame sensor connection** Connection for the flame sensor.
3	**Oxygen infeed** Connection for the oxygen infeed.	**4**	**Sample inlet** Solid and liquid samples: inlet for sample boats. Gaseous samples: connection of the LPG/GSS module.

- Plug the capillary into a FAST connector *(see Chapter "Replacing tubing connections" in the Combustion Module operating instructions)*.
- Carefully attach the FAST connector to the connector *(22-**1**)*.

You can find information on connecting the flame sensor, the oxygen infeed and the ABD in the Combustion Module (AJ) operating instructions.

4.11.2 Connecting the Combustion Module (AJ) outlet: absorber solution

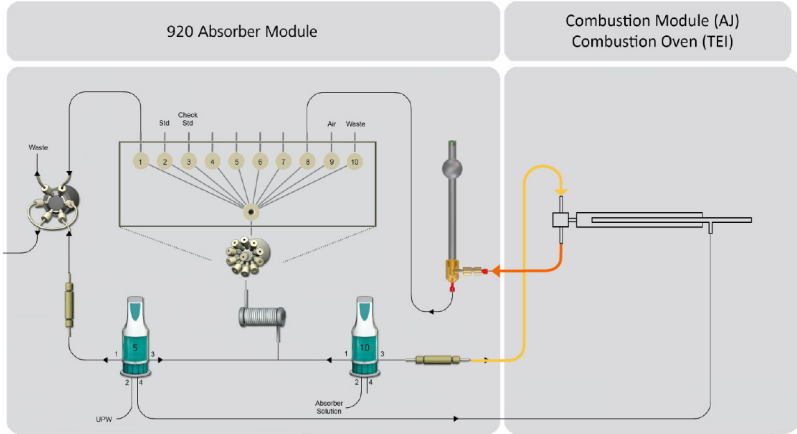

The capillary with the yellow colored sleeve and the thicker capillary are connected to the CIC T connector in the Combustion Module (AJ).

There are 2 connections on the CIC T connector in the Combustion Module (AJ):

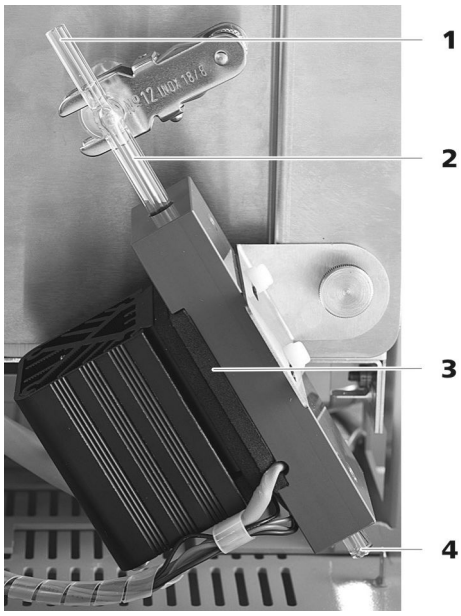

Figure 23 Combustion tube – Outlet

1	**Absorber solution connection** Connection for the capillary with the yellow colored sleeve *(7-**9**)*.	**2**	**T connector CIC (6.7301.210)** T connector on the combustion tube's outlet. For feeding the absorber solution in and removing the combustion gases.
3	**Peltier cooler** For cooling the combustion gases at the combustion tube's outlet.	**4**	**Combustion gases connector** Connector for the PTFE capillary, 1/8 in. / 1/16 in. ID / 1.5 m (6.1803.130) *(7-**8**)*.

Connecting the capillary for the combustion gases

1 Feeding the capillary into the Combustion Module (AJ)

- Push the loose end of the PTFE capillary 1/8 in. / 1/16 in. ID / 1.5 m (6.1803.130) *(7-**8**)* through the opening in the right-side door of the 920 Absorber Module.
- Guide the capillary inside through the round opening in the bottom of the Combustion Module (AJ).

2 Shortening the capillary

Shorten the capillary using the capillary cutter so that it can be connected to the CIC T connector's outlet *(23-**4**)* easily.

3 Connecting the capillary

- Insert the capillary into an angled FAST connector (6.7304.000).
- Carefully attach the FAST connector to the CIC T connector's outlet *(23-**4**)*.

Connecting the capillary for the absorber solution

1 Feeding the capillary into the Combustion Module (AJ)

Guide the loose end of the capillary with the yellow colored sleeve inside through the round opening at the top in the left-side wall of the Combustion Module (AJ).

2 Shortening the capillary

Shorten the capillary using the capillary cutter so that it can be connected to the CIC T connector's outlet *(23-**1**)* easily.

3 Connecting the capillary

- Plug the capillary into a straight FAST connector (6.7304.010) *(see Chapter "Replacing tubing connections" in the Combustion Module operating instructions)*.
- Carefully attach the FAST connector to the CIC T connector's outlet *(23-**1**)*.

4.11.3 Connecting the Combustion Oven (TEI) inlet

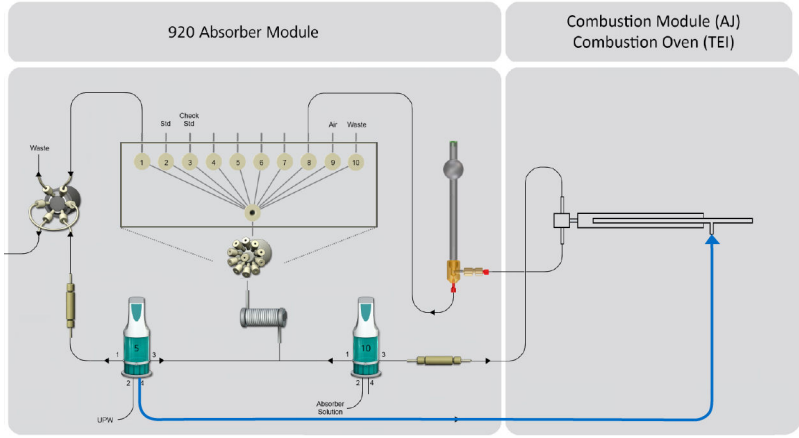

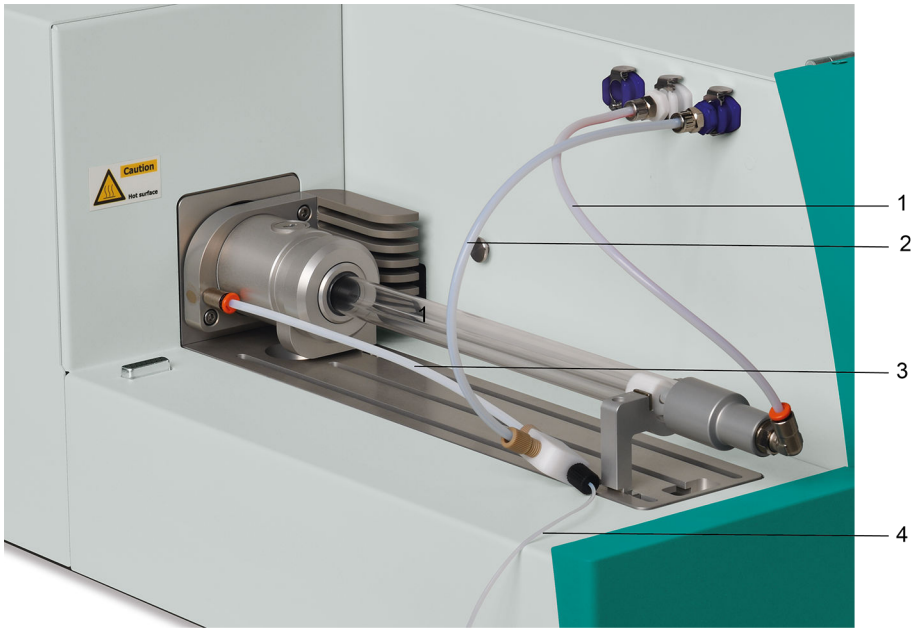

Figure 24 Combustion tube – Inlet

1	**Argon infeed** Connection for the argon infeed.	**2**	**Oxygen infeed** Connection for the oxygen infeed.
3	**Oxygen infeed** Connection for the oxygen infeed.	**4**	**Water infeed inlet** Connector for the ultrapure water supply.

4.11.4 Connecting the Combustion Oven (TEI) outlet

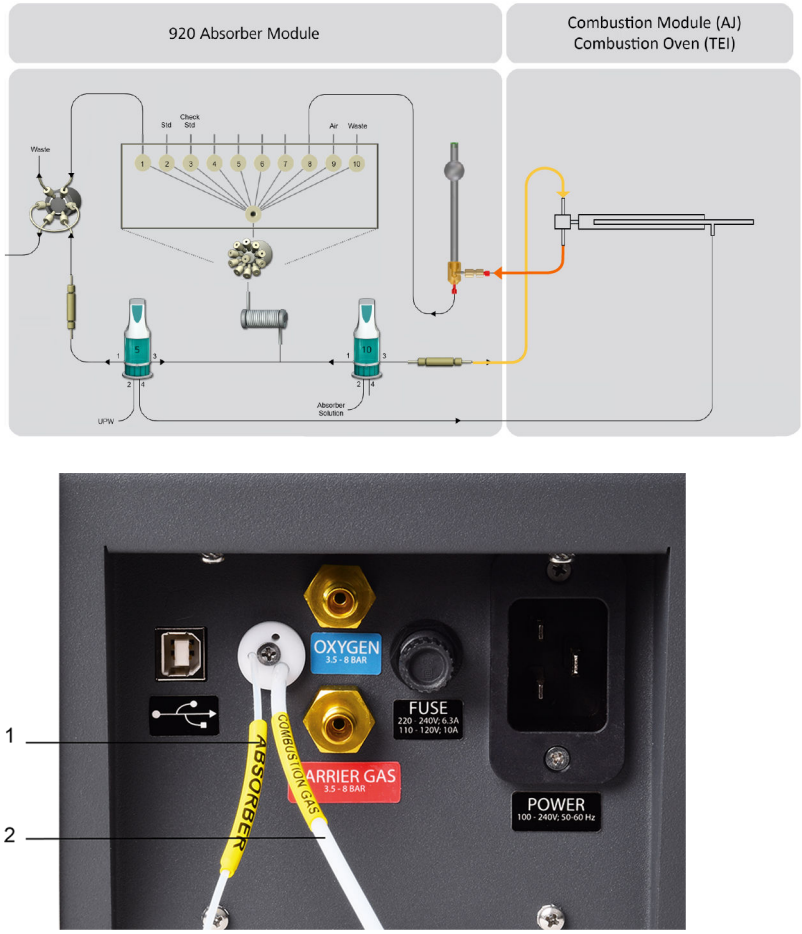

Figure 25 Combustion Oven (TEI) – Outlet

1 **Absorber solution capillary** Capillary for the infeed of absorber solution at the tube outlet.	**2** **Combustion gases capillary** Capillary for transporting the combustion gases from the tube outlet to the absorber tube.

4.11.5 Connecting the 930 Compact IC Flex

Combustion Module (AJ): A capillary is routed out on the left side of the 920 Absorber Module.

Combustion Oven (TEI): A capillary is routed out on the right side of the 920 Absorber Module.

This capillary is connected to the injection valve of the 930 Compact IC Flex.

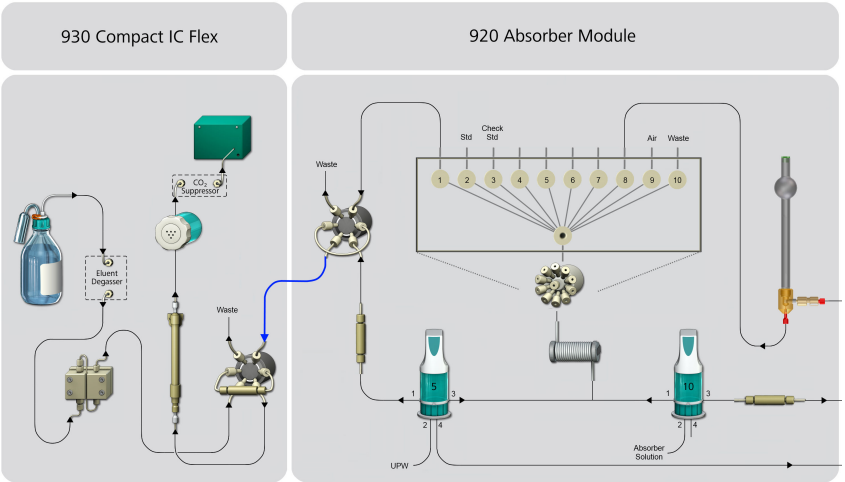

Accessories

For this step you need:

- Capillary cutter (6.2621.080)

Connecting the 930 Compact IC Flex

1
- Shorten the end of the capillary using the capillary cutter so that it can be connected to the injection valve of the 930 Compact IC Flex easily.
- Connect the end of the capillary to port 1 of the injection valve *(see manual for 930 Compact IC Flex)*.

NOTE

The process for connecting the respective instruments to a computer or a power supply is described in the respective manuals:

- 930 Compact IC Flex manual.
- 920 Absorber Module manual.
- Combustion Module (AJ) operating instructions (on the accompanying CD).
- Autosampler MMS 5000 (AJ) operating instructions (on the accompanying CD).
- LPG/GSS Module (AJ) manual (on the accompanying CD).
- Combustion Oven (TEI) manual (on the accompanying USB flash drive).
- Liquid Autosampler CIC (TEI) manual (on the accompanying USB flash drive)
- Solid Autosampler CIC (TEI) manual (on the accompanying USB flash drive).
- GLS Sampler CIC (TEI) manual (on the accompanying USB flash drive).

5 Start-up

All of the Combustion IC system components have to be completely installed before putting the 920 Absorber Module into operation; this means:

- The Combustion Module including ABD and optional sampler (MMS 5000) and, if necessary, the LPG/GSS Module is installed according to the specifications in the Combustion IC operating instructions from Analytik Jena/TEI.
- The Combustion Oven (TEI) including, if applicable, Liquid Autosampler CIC, Solid Autosampler CIC and/oder GLS Autosampler CIC from Trace Elemental Instruments is installed according to the operating instructions.
- The 920 Absorber Module is installed according to the specifications in the manual for the 920 Absorber Module and is connected to the Combustion Module (AJ) / Combustion Oven (TEI).
- The 930 Compact IC Flex (2.930.2560) is installed according to the specifications in the manual for the ion chromatograph and is connected to the 920 Absorber Module.
- The ion chromatograph is connected to a computer where the MagIC Net software and TEIS are installed. TEIS is only necessary for the Combustion Oven (TEI).

Putting the Combustion IC system (AJ) into operation

1 Starting the software

- Switch on the computer and start the software MagIC Net.
- Enter user name and password.

The software starts and shows the **Workplace** program part.

2 Switching on the instruments

- Switch on the Combustion Module (AJ): the Combustion Module (AJ) and the MMS 5000 sampler (AJ) or the LPG/GSS Module (AJ), if present.
- Switch on the Combustion-IC-System.
- Switch on the ion chromatograph.
  MagIC Net detects all of the instruments and asks if they are to be saved to the device table.
- Confirm all of the prompts with **[Yes]**.

NOTE

It can sometimes happen that an instrument is not automatically recognized when it is newly connected to an existing system.

When an instrument is not automatically recognized, then the "basic initialization" has to be run in MagIC Net. Additional information concerning the basic initialization can be found in the MagIC Net online help or in the MagIC Net manual.

3 Loading the method

Workplace ► Run

- Select the **Equilibration** tab.
- In the **Method** field, load the **Preparation of Combustion IC** method.

4 Starting the equilibration

- Start the equilibration with **[Start HW]**.

The instrument is ready to measure as soon as equilibration has finished.

Putting the Combustion IC system (TEI) into operation

1 Starting the software

- Switch on the computer and start the MagIC Net software and TEIS.
- Enter the user name and the password in each software.

MagIC Net: The software starts and shows the **Workplace** program part.

TEIS: The software starts and shows the **Task Manager** program part.

2 Switching on the instruments

- Switch on the Combustion Oven (TEI) and the Liquid Autosampler CIC (TEI), Solid Autosampler CIC (TEI) or the GLS Sampler CIC (TEI), if present.
- Switch on the ion chromatograph and the 920 Absorber Module. MagIC Net detects both instruments and asks if they are to be saved to the device table.
- Confirm all of the prompts with **[Yes]**.

3 Loading the method in MagIC Net

Workplace ► Run

- Select the **Equilibration** tab.
- In the **Method** field, load the **Preparation of Combustion IC** method.

4 Starting the equilibration of the ion chromatograph

- Start the equilibration with **[Start HW]**.

The IC instrument is ready to measure as soon as equilibration has finished.

5 Start the equilibration of the Combustion Oven (TEI) and the Liquid Autosampler CIC (TEI), Solid Autosampler CIC (TEI) or the GLS Sampler CIC (TEI), if present, in the TEIS software.

6 Operation and maintenance

6.1 General

The following chapters describe the care and maintenance tasks that can be carried out by the user.

6.2 Door

CAUTION

The door is made of PMMA (poly(methyl methacrylate)). It must never be cleaned with abrasive media or solvents.

CAUTION

Never use the door as a handle.

6.3 Dosino

Information regarding the maintenance of the Dosino can be found in the Dosino manual enclosed in your delivery. Alternatively, you can also download it from the Internet at *www.metrohm.com*.

6.4 Dosing unit

Information regarding the maintenance of the Dosino can be found in the Dosino manual enclosed in your delivery. Alternatively, you can also download it from the Internet at *www.metrohm.com*.

6.5 Metrosep I Trap 1

Information regarding the maintenance of the Metrosep I Trap 1 can be found in the leaflet on the trap column enclosed in your delivery. Alternatively, you can also download it from the Internet at *www.metrohm.com*.

6.6 Metrosep A Trap 1

Information regarding the maintenance of the Metrosep A Trap 1 can be found in the leaflet on the trap column enclosed in your delivery. Alternatively, you can also download it from the Internet at *www.metrohm.com*.

6.7 10-port valve

Check on a regular basis whether the connections of the capillaries are tight.

If you find leaking connections, loosen and reconnect them.

More information about how to handle pressure screws and capillaries can be found on the Internet at *ic-help.metrohm.com*.

6.8 6-port valve

Check on a regular basis whether the connections of the capillaries are tight.

If you find leaking connections, loosen and reconnect them.

More information about how to handle pressure screws and capillaries can be found on the Internet at *ic-help.metrohm.com/*.

6.9 Absorber tube

The absorber tube requires maintenance if the check valve and the absorber tube holder clog up due to sooting resulting from deflagration in the combustion tube.

The absorber tube holder (6.2766.000) and the inlet valve (6.2824.170) in the check valve must be exchanged.

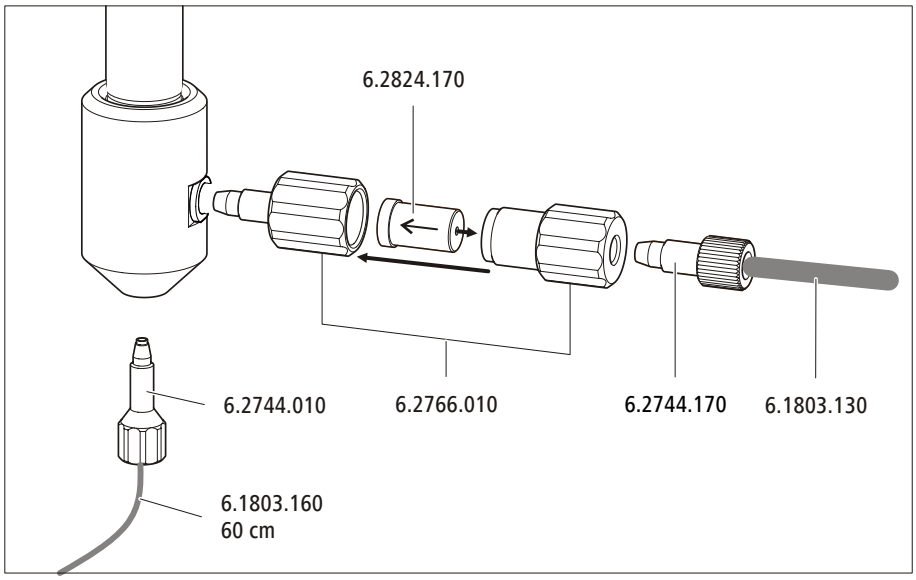

Exchanging the inlet valve

1 Disconnecting the inlet capillary

Unscrew the pressure screw (6.2744.170) from the check valve.

2 Unscrewing the check valve holder

Unscrew the check valve holder (6.2766.010) from the absorber tube holder.

3 Replacing the inlet valve

- Disassemble the check valve holder by unscrewing it.
- Remove the inlet valve.
- Insert the new inlet valve (see figure).
- Reassemble by screwing the parts of the check valve together.

Exchanging the absorber tube holder

1 Unscrewing the outlet capillary

On the bottom side, unscrew the pressure screw from the absorber tube holder.

2 Unscrewing the check valve holder

Unscrew the check valve holder (6.2766.010) from the absorber tube holder.

3 Replacing the absorber tube holder

- Unscrew the absorber tube holder from the absorber tube.
- Place a new sealing ring in the new absorber tube holder.
- On the bottom, screw the new absorber tube holder to the absorber tube.

4 Tightening the check valve holder

Screw the check valve holder with the new inlet valve to the side of the absorber tube holder.

5 Fastening the inlet capillary again

Screw the inlet capillary (6.1803.130) to the check valve again using the pressure screw (6.2744.170).

6 Mounting the outlet capillary

Tighten the loose end of the capillary (6.1803.160) (connected to port 8 of the 10-port valve) to the bottom of the absorber tube holder using a pressure screw (6.2744.010).

7 Troubleshooting

7.1 Problems and their solutions

Problem	Cause	Remedy
Combustion Module (AJ) does not work.	*The Combustion Module (AJ) is recognized by MagIC Net and entered in the list of devices, even if it has not been switched on yet.*	Switch on all devices of the Combustion Module (AJ).
Dosinos do not dose correctly.	*The determination was canceled. The Dosinos' status is not defined.*	Run the method **Preparation of Combustion IC**.

7.2 Problems with the Dosino

If you experience problems with the Dosino, you can find information on troubleshooting in the manual for the 800 Dosino enclosed in the delivery. Alternatively, you can also download it from the Internet at *www.metrohm.com*.

7.3 Problems with the dosing units

If you experience problems with the dosing units, you can find information on troubleshooting in the manual for the 800 Dosino enclosed in the delivery. Alternatively, you can also download it from the Internet at *www.metrohm.com*.

8 Accessories

Up-to-date information on the scope of delivery and optional accessories for your product can be found on the Internet. You can download this information using the article number as follows:

Downloading the accessories list

1. Enter *https://www.metrohm.com/* into your Internet browser.
2. Enter the article number (e.g. **2.920.0010**) into the search field.

   The search result is displayed.
3. Click on the product.

   Detailed information regarding the product is shown on various tabs.
4. On the **Included parts** tab, click on **Download the PDF**.

   The PDF file with the accessories data is created.

NOTE

Once you have received your new product, we recommend downloading the accessories list from the Internet, printing it out and keeping it together with the manual for reference purposes.

9 Technical specifications

9.1 Reference conditions

The technical data listed in this Chapter refers to the following reference conditions:

Ambient temperature	+25 °C (± 3 °C)
Instrument status	> 40 minutes in operation (equilibrated)

9.2 Ambient conditions

Operation	
Nominal function range	+5 to +45 °C at max. 80% relative humidity, non-condensing
Storage	+5 to +45 °C at max. 80% relative humidity, non-condensing
Altitude / Pressure range	max. 3,000 m.a.s.l. sea level / min. 700 mbar
Overvoltage category	II
Pollution degree	2

9.3 Housing

Dimensions	
Width	302 mm
Height	562 mm
Depth	368 mm
Weight	
Without accessories	15.0 kg
With Dosinos	16.2 kg
Base tray, housing and bottle holder material	Polyurethane hard foam (PUR) with flame retardation for fire class UL 94 V-0, CFC-free, coated

IP degree of protection	IP 20
Controls	
Indicators	LED for standby indicator
On/off switch	On the rear of the instrument

9.4 Dosino

Please refer to the manual for the Dosino enclosed in the delivery for information regarding the technical specifications of the Dosino. Alternatively, you can also download it from the Internet at *www.metrohm.com*.

9.5 10-port valve

Connections	1 out of 10
Resistance to solvents	No restrictions
Switching time	typ.100 ms
Pressure resistance	2.0 MPa (20 bar) Valve function prevents damage at overpressure

9.6 6-port valve

Actuator switching time	typ.100 ms
Maximum operating pressure	35 MPa (350 bar)
Material	PEEK

9.7 Absorber tube

Material	Glass
Dimensions	
Length	240 mm
Maximum volume	8 mL

9.8 Leak sensor

Type	Electronic, no calibration necessary

9.9 Energy supply

Nominal voltage range	100–240 V (± 10%)
Nominal frequency range	50–60 Hz (± 3%)
Power consumption	▪ 65 W for typical analysis application ▪ 25 W standby (conductivity detector to 40 °C)
Power supply unit	▪ up to 300 W maximum, electronically monitored ▪ internal fuse 3.15 A

9.10 Interfaces

USB	
Inlet	1 plug, type B (for connecting to a computer)
Outlet	2 plugs, type A (for connection to further instruments equipped with USB connector)
MSB	2 Mini DIN plugs, 8-pin (female) (for Dosinos)

CAUTION

When connecting an instrument to the MSB connector you **must** switch off the 920 Absorber Module.

Extension Module	1 15-pin DSUB (female)
Detector	2 DSUB 15-pin high-density plugs (female)
Leak sensor	1 jack plug

Index

6-port valve 62
Technical specifications 95
Valve position: Fill 67
Valve position: Inject 67
10-port valve 55
Technical specifications 95
930 Compact IC Flex
Connect 82

A

Ambient conditions 94

C

CIC
See also Combustion IC 7
Combustion IC
Definition 7
Detectable substances 7
Combustion Module
Connect 76
Computer connection 74
Connect
Power grid 75
To computer 74

D

Detector
Interface 96
Determination
Sequence 8
Dimensions 94
Door 88
Dosino
For absorber solution 39
For ultrapure water 19
Drainage tubing
Installation 72

E

Electrostatic charge 5
Energy supply 96

F

Fill
6-port valve: valve position . 67
Frequency 96

H

Housing 94
Humidity 94

I

Inject
6-port valve: Valve position . 67
Installation
6-port valve 62
10-port valve 55
Dosino absorber solution 39
Dosino ultrapure water 19
Drainage tubing 72
Leak sensor 73
Overview 16
Interface
MSB 96
USB 96
Interfaces 96
Extension Module 96
Leak sensor 96

L

Leak sensor
Installation 73
Interface 96
Technical specifications 96

M

Material 94
MSB 96

O

Operation 94
Overvoltage category 94

P

Power connection 75
Power consumption 96
Power supply unit 96

R

Reference conditions 94

S

Safety instructions 4
Sea level 94
Service 4
Storage 94
Supply voltage 4
System description 8

T

Technical data
Reference conditions 94
Technical specifications
6-port valve 95
10-port valve 95
Detector 96
Interfaces 96
Leak sensor 96
Temperature 94

U

USB 96

V

Voltage 96