887 Professional UV/VIS Detector

2.887.0010

Manual

8.887.8003EN / 2019-12-05

Metrohm

Metrohm AG
CH-9100 Herisau
Switzerland
Phone +41 71 353 85 85
Fax +41 71 353 89 01
info@metrohm.com
www.metrohm.com

887 Professional UV/VIS Detector

2.887.0010

Manual

8.887.8003EN / 2019-12-05

Technical Communication
Metrohm AG
CH-9100 Herisau
techcom@metrohm.com

This documentation is protected by copyright. All rights reserved.

This documentation has been prepared with great care. However, errors can never be entirely ruled out. Please send comments regarding possible errors to the address above.

Table of contents

1 Introduction 1

1.1 Instrument description 1

1.2 Intended use 1

1.3 About the documentation 2
1.3.1 Modifications since previous version 2
1.3.2 Symbols and conventions 2

1.4 Safety instructions 3
1.4.1 General notes on safety 3
1.4.2 Electrical safety 3
1.4.3 Tubing and capillary connections 4
1.4.4 Flammable solvents and chemicals 5
1.4.5 Recycling and disposal 5

2 Overview of the instrument 6

2.1 Front 6

2.2 Rear 7

3 Installation 8

3.1 Setting up the instrument 8
3.1.1 Packaging 8
3.1.2 Checks 8
3.1.3 Location 8

3.2 Proposed setup 8

3.3 Mounting base tray and bottle holder (optional) 10
3.3.1 Removing / mounting the base tray 10
3.3.2 Removing / mounting the bottle holder 12

3.4 Capillary connections in the IC system 15

3.5 Installing the flow-through cell 17

3.6 Connecting the flow-through cell 19

3.7 Connecting the instrument 20
3.7.1 Connecting the instrument to the PC 20
3.7.2 Connecting the instrument to the power grid 21

4 Start-up 22

5 Operation 24

6 Operation and maintenance 25

6.1 General notes 25
6.1.1 Care 25
6.1.2 Maintenance by Metrohm Service 25
6.1.3 Operation 25
6.1.4 Shutting down 26

6.2 Door 26

6.3 Replacing the UV lamp 27

6.4 Replacing the VIS Lamp 30

6.5 Adjusting the lamp settings 30

6.6 Cleaning the flow-through cell 31

7 Troubleshooting 35

7.1 Problems and their solutions 35

8 Technical specifications 36

8.1 Reference conditions 36

8.2 UV/VIS detector 36

8.3 Lamps 37

8.4 Ambient conditions 38

8.5 Housing 38

8.6 Mains connection 38

9 Accessories 39

Index 40

Table of figures

Figure 1 Front 6
Figure 2 Rear 7
Figure 3 Proposed setup 9
Figure 4 Connection of capillaries with pressure screws 15
Figure 5 Cell block 17
Figure 6 Connecting detector input 19
Figure 7 Connecting detector output 20
Figure 8 Intensity spectrum ok 23
Figure 9 Intensity spectrum too high 23
Figure 10 Operating hours counter 27
Figure 11 Lamp module 27
Figure 12 Lamp module – without UV lamp 29
Figure 13 Flow-through cell – parts 33

1 Introduction

1.1 Instrument description

The **887 Professional UV/VIS Detector** is within the 850 Professional IC family an independent instrument for the photometric determination of light absorbing substances in the UV/VIS range.

It can be used as an alternative UV/VIS detector with any instrument of the 850 Professional IC, the 881 Compact IC pro, and the 882 Compact IC plus families.

The 887 Professional UV/VIS Detector is operated with **MagIC Net™** Software. It is connected via a USB connection to a PC on which MagIC Net™ is installed. The software automatically recognizes the instrument and checks its functional readiness. MagIC Net™ controls and monitors the instrument, evaluates the measured data and administers it in a database.

Additional information on operating MagIC Net™ can be found in the document "*Tutorial for MagIC Net™*" or in the online help.

1.2 Intended use

The 887 Professional UV/VIS Detector is used as an independent detector with various analysis instruments of the Metrohm line of instruments.

This instrument is suitable for processing chemicals and flammable samples. The usage of the 887 Professional UV/VIS Detector therefore requires that the user has basic knowledge and experience in the handling of toxic and caustic substances. Knowledge with respect to the application of the fire prevention measures prescribed for laboratories is also mandatory.

1.3 About the documentation

CAUTION

Please read through this documentation carefully before putting the instrument into operation. The documentation contains information and warnings which the user must follow in order to ensure safe operation of the instrument.

1.3.1 Modifications since previous version

This manual substitutes its previous version 8.887.8002EN, it includes the following changes:

- The conditions for the adjustment of lamp settings are specified more precisely *(see "Evaluating the intensity spectrum", page 22)* and *(see chapter 6.5, page 30)*.
- In chapter *Replacing the UV lamp, page 27* the pictures were replaced to show the new lamp module, which allows the use of the new halogen lamp.
- Pin assignment of the analog outpot added *(see chapter 8.2, page 36)*.

1.3.2 Symbols and conventions

The following symbols and styles are used in this documentation:

*(5-**12**)*	**Cross-reference to figure legend** The first number refers to the figure number, the second to the instrument part in the figure.
1	**Instruction step** Carry out these steps in the sequence shown.
	Warning This symbol draws attention to a possible life hazard or risk of injury.
	Warning This symbol draws attention to a possible hazard due to electrical current.
	Warning This symbol draws attention to a possible hazard due to heat or hot instrument parts.

	Warning This symbol draws attention to a possible biological hazard.
	Caution This symbol draws attention to a possible damage of instruments or instrument parts.
	Note This symbol marks additional information and tips.

1.4 Safety instructions

1.4.1 General notes on safety

WARNING

Operate this instrument only according to the information contained in this documentation.

This instrument left the factory in a flawless state in terms of technical safety. To maintain this state and ensure non-hazardous operation of the instrument, the following instructions must be observed carefully.

1.4.2 Electrical safety

The electrical safety when working with the instrument is ensured as part of the international standard IEC 61010.

WARNING

Only personnel qualified by Metrohm are authorized to carry out service work on electronic components.

WARNING

Never open the housing of the instrument. The instrument could be damaged by this. There is also a risk of serious injury if live components are touched.

There are no parts inside the housing which can be serviced or replaced by the user.

Supply voltage

WARNING

An incorrect supply voltage can damage the instrument.

Only operate this instrument with a supply voltage specified for it (see rear panel of the instrument).

Protection against electrostatic charges

WARNING

Electronic components are sensitive to electrostatic charges and can be destroyed by discharges.

Do not fail to pull the power cord out of the power socket before you set up or disconnect electrical plug connections at the rear of the instrument.

1.4.3 Tubing and capillary connections

CAUTION

Leaks in tubing and capillary connections are a safety risk. Tighten all connections well by hand. Avoid applying excessive force to tubing connections. Damaged tubing ends lead to leakage. Appropriate tools can be used to loosen connections.

Check the connections regularly for leakage. If the instrument is used mainly in unattended operation, then weekly inspections are mandatory.

1.4.4 Flammable solvents and chemicals

WARNING

All relevant safety measures are to be observed when working with flammable solvents and chemicals.

- Set up the instrument in a well-ventilated location (e.g. fume cupboard).
- Keep all sources of flame far from the workplace.
- Clean up spilled liquids and solids immediately.
- Follow the safety instructions of the chemical manufacturer.

1.4.5 Recycling and disposal

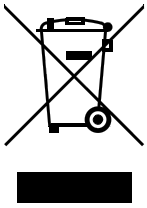

This product is covered by European Directive 2012/19/EU, WEEE – Waste Electrical and Electronic Equipment.

The correct disposal of your old instrument will help to prevent negative effects on the environment and public health.

More details about the disposal of your old instrument can be obtained from your local authorities, from waste disposal companies or from your local dealer.

2 Overview of the instrument

2.1 Front

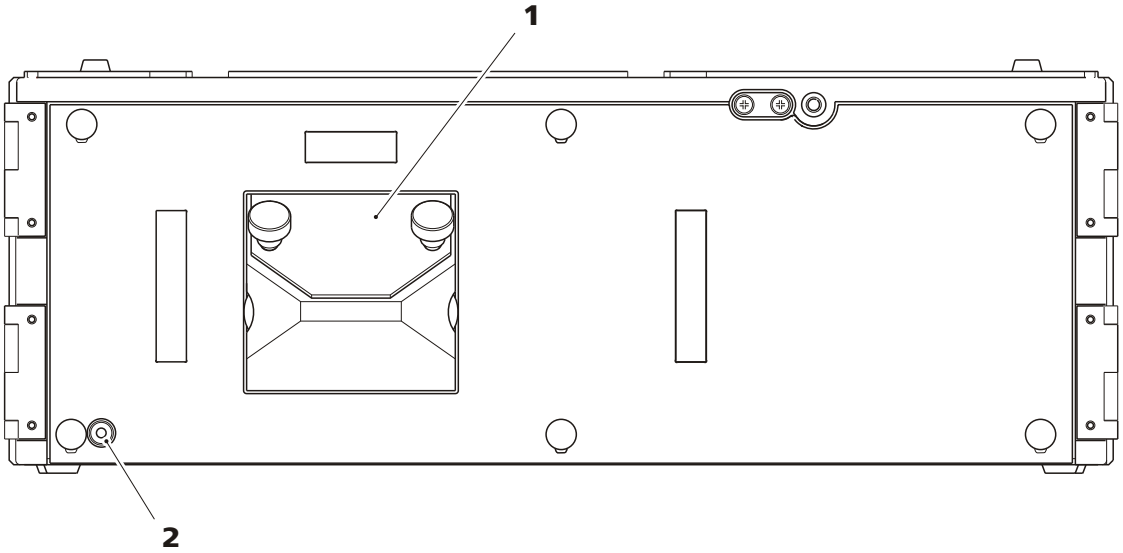

Figure 1 Front

1	**Detector block**	**2**	**Standby indicator**

2.2 Rear

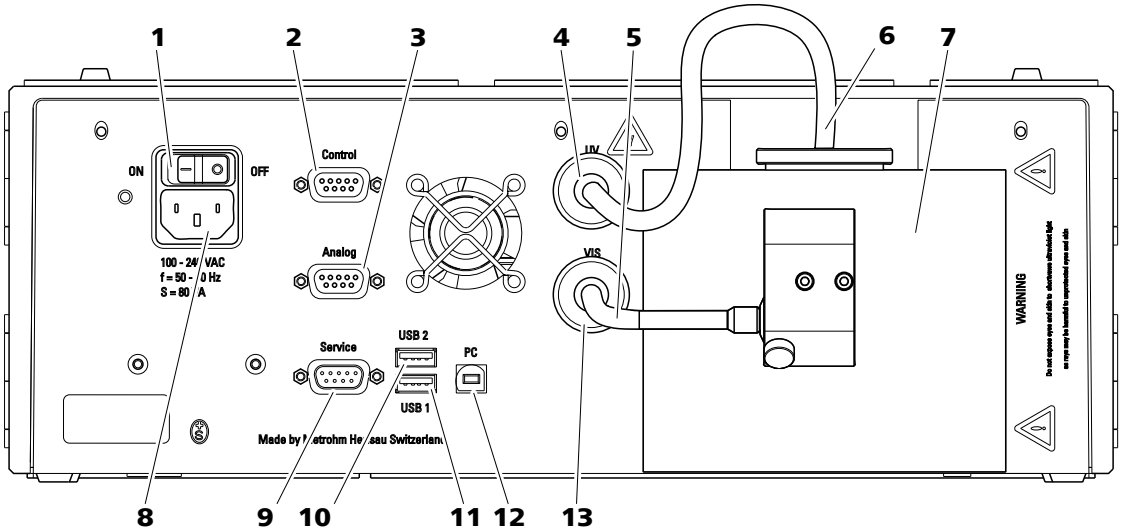

Figure 2 Rear

1	**Mains switch** For switching the instrument on and off. I = On O = Off	**2**	**Control connection socket** Not Used.
3	**Analog connection socket** Output for analog signals.	**4**	**UV connection socket** For connecting the cable of the UV lamp.
5	**VIS lamp connection cable**	**6**	**UV lamp connection cable**
7	**Lamp cooling element**	**8**	**Mains connection socket** For connecting the mains cable.
9	**Service connection socket** Connection for service.	**10**	**USB 2 connection socket** For connecting additional USB instruments.
11	**USB 1 connection socket** For connecting additional USB instruments.	**12**	**PC connection socket** For connecting the USB cable to the PC.
13	**VIS connection socket** For connecting the cable of the VIS lamp.		

3 Installation

3.1 Setting up the instrument

3.1.1 Packaging

The instrument is supplied in protective packaging together with the separately packed accessories. Keep this packaging, as only this ensures safe transportation of the instrument.

3.1.2 Checks

Immediately after receipt, check whether the shipment has arrived complete and without damage by comparing it with the delivery note.

3.1.3 Location

The instrument has been developed for operation indoors and may not be used in explosive environments.

Place the instrument in a location of the laboratory which is suitable for operation and free of vibrations and which provides protection against corrosive atmosphere and contamination by chemicals.

The instrument should be protected against excessive temperature fluctuations and direct sunlight.

3.2 Proposed setup

The 887 Professional UV/VIS Detector can be used as a detector with the instruments of the 850 Professional IC, the 881 Compact IC pro, and the 882 Compact IC plus family. For many applications with photometric detection, a post column reaction with the 886 Professional Thermostat / Reactor (2.886.0110) is required. To build such a system, you will need a 887 Professional UV/VIS Detector and the following instruments:

- any 850 Professional IC instrument, or
  any 881 Compact IC pro instrument, or
  882 Compact IC plus
- the 886 Professional Thermostat / Reactor
- optionally: a 872 Extension Module for sample preparation
- optionally, if the PCR reagent is pumped with a high pressure pump: a Metrosep BP 1 Guard/2.0 (6.1015.100) backpressure column.

An IC system with photometric detection and post column reaction can be set up in in various combinations *(see figure 3, page 9)*.

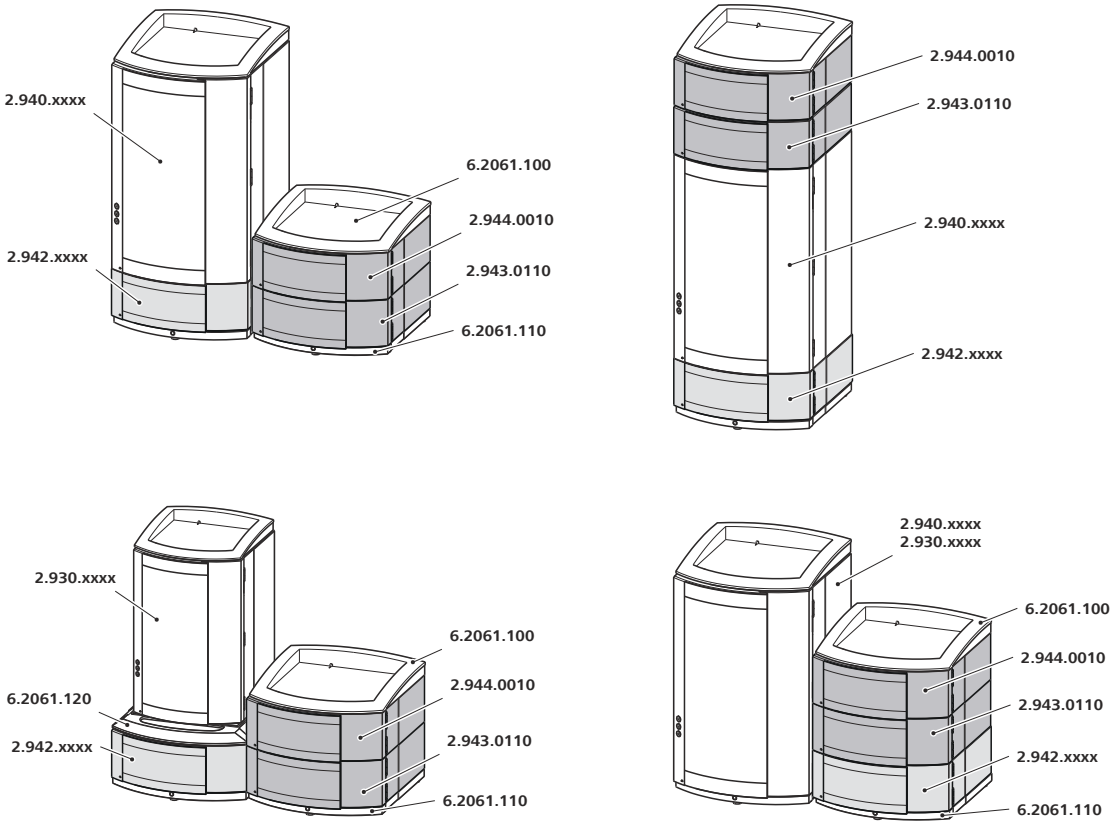

Figure 3 Proposed setup

Note for proposed setup

If you want to place the instruments in two stacks, we recommend you protect the instruments of the second stack and also order the following accessories:

- 6.2061.100 Bottle holder (ProfIC)
- 6.2061.110 Base tray with sensor for Professional IC systems

If you want to stack a 881 Compact IC pro or an 882 Compact IC plus instrument with a 887 Professional UV/VIS Detector, the 886 Professional Thermostat / Reactor and/or a 872 Extension Module, you will require the 6.2061.120 System Connector to adapt the different support surfaces.

3.3 Mounting base tray and bottle holder (optional)

The 6.2061.110 base tray and 6.2061.100 bottle holder protect IC instruments from dust, dirt and leaking fluids. If more than one instrument of the Professional IC family is used, these can be set up in one or more stacks. We recommend that a base tray and a bottle holder be mounted for each stack of IC instruments.

Bottle holder and base tray must be removed or mounted every time one of the following instruments is to be mounted on or under an 850 Professional IC instrument:

- One or more 872 Extension Module.
- An 886 Professional Thermostat / Reactor.
- An 887 Professional UV/VIS Detector.
- or another instrument of the same support surface.

3.3.1 Removing / mounting the base tray

The base tray must be removed, in case you want to place another instrument under the IC instrument. Proceed as follows:

Removing the base tray

Before you can remove the base tray, the following preconditions must be met:

- The instrument is switched off.
- The bottle holder is cleared.
- All connections at the rear of the instrument are disconnected.
- There are no loose parts in the instrument.

To remove the base tray, you need a 3 mm hexagon key (6.2621.100).

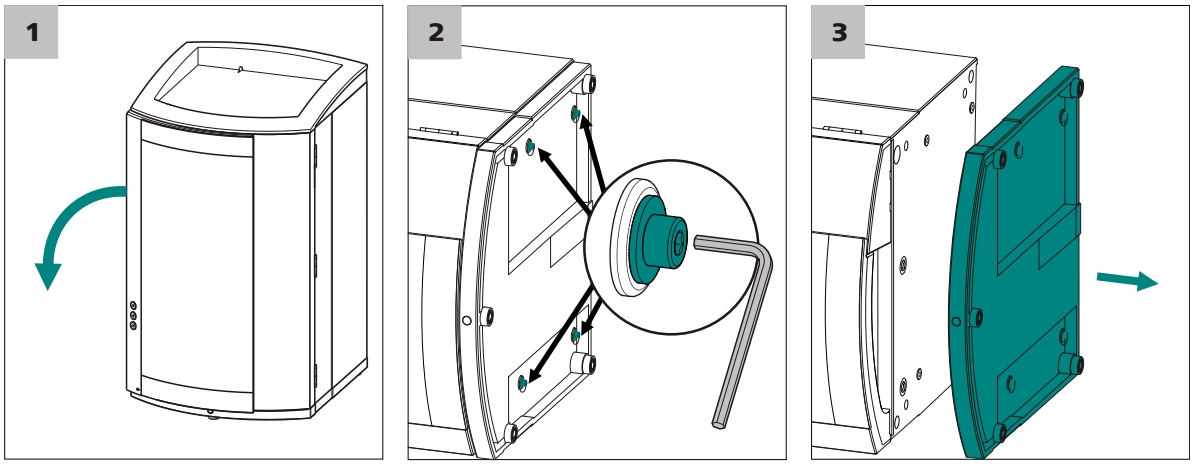

1 Tilt the instrument sideways and lay it down flat.

2 Loosen the cylinder screws with the 3 mm hexagon key and remove them and their washers.

3 Remove the base tray.

The base tray must always be mounted under the lowermost instrument of the stack. Proceed as follows:

Mounting the base tray

Before you can mount the base tray, the following preconditions must be met:

- The instrument is switched off.
- The bottle holder is cleared.
- All connections at the rear of the instrument are disconnected.
- There are no loose parts in the instrument.
- The instrument is lying on it side, and the bottom surface is visible.

To mount the base tray, you need a 3 mm hexagon key (6.2621.100).

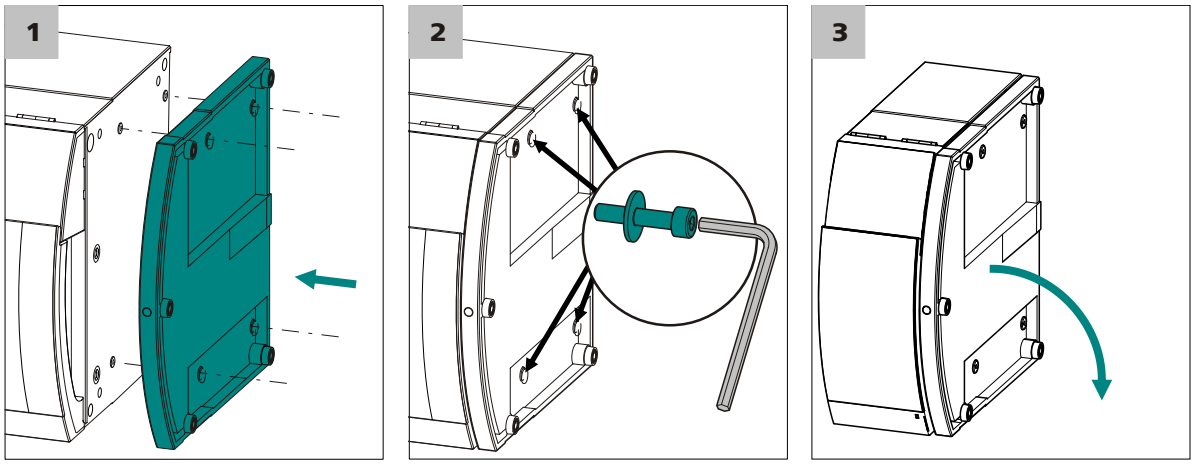

1 Place the base tray in such a way that the openings in the base tray match exactly the screw threads in the bottom of the instrument.

2 Slide the four washers onto the four cylinder screws, insert the screws and tighten them with the 3 mm hexagon key.

3 Set the instrument up on the base tray.

Stack other instruments in the required order. Mount the bottle holder (6.2061.100) onto the topmost instrument on the stack *(see "Mounting the bottle holder", page 13)*.

3.3.2 Removing / mounting the bottle holder

The bottle holder must be removed in case you want to mount another instrument on top of the IC instrument. Proceed as follows:

Removing the bottle holder

Before you can remove the bottle holder, the following preconditions must be met:

- The instrument is switched off.
- The bottle holder is cleared.
- Drainage tubing is disconnected from the drainage tubing connection of the bottle holder.

To remove the bottle holder, you need a 3 mm hexagon key (6.2621.100).

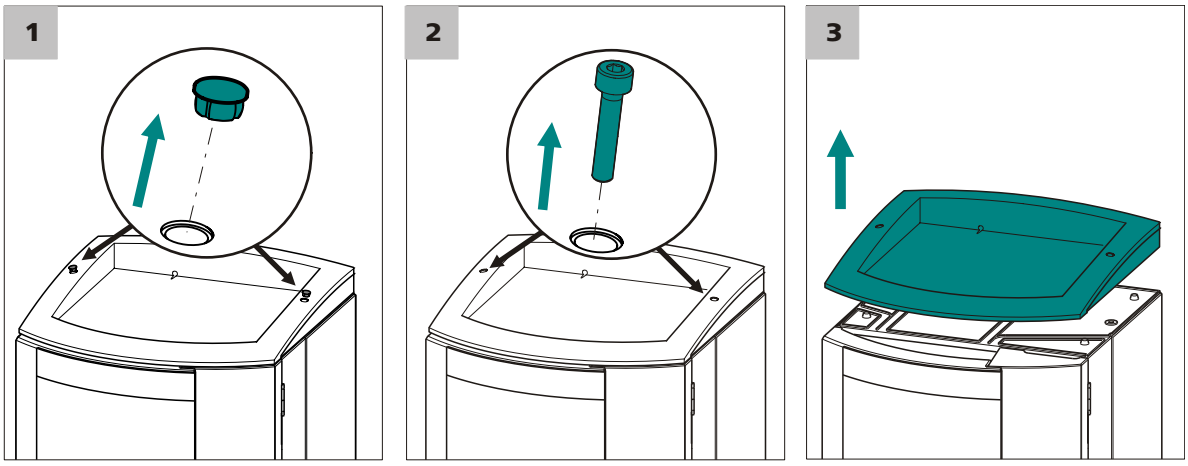

1 Remove the two covering stoppers.

2 Loosen the two cylinder screws with the 3 mm hexagon key and remove them.

3 Remove the bottle holder.

Stack other instruments in the required order. Mount the bottle holder (6.2061.100) onto the topmost instrument on the stack *(see "Mounting the bottle holder", page 13)*.

Proceed as follows:

Mounting the bottle holder

Before you can mount the bottle holder, the following preconditions must be met:

- The instrument is switched off.

To mount the bottle holder, you need a 3 mm hexagon key (6.2621.100).

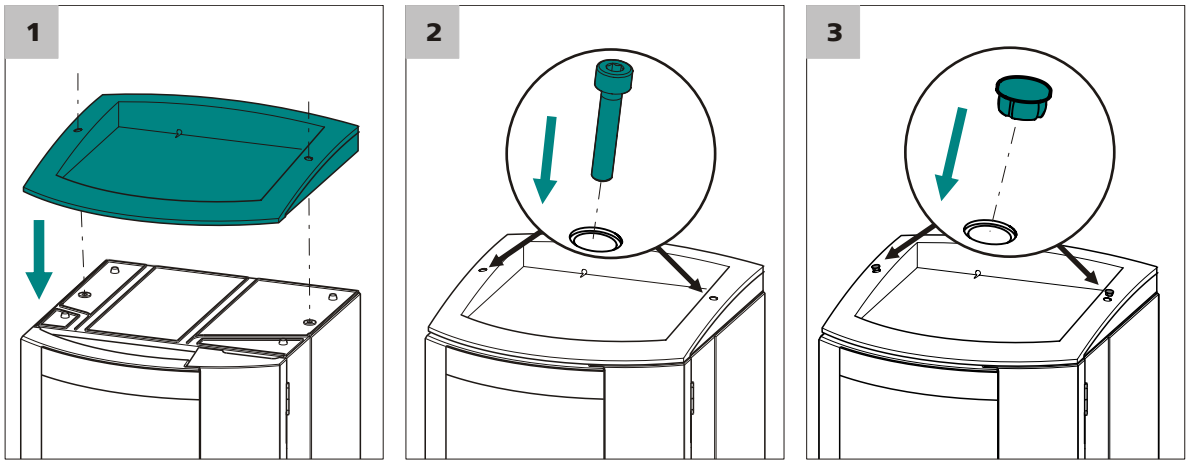

1 Place the bottle holder onto the topmost instrument in such a way that the openings in the bottle holder exactly match the screw threads on the top surface of the instrument.

2 Insert the two cylinder screws and tighten them with the 3 mm hexagon key.

3 Insert covering stoppers.

After having attached the bottle holder, all connections which were undone at the beginning of the process, must be reconnected. Proceed as follows:

Restoring the loosened connections

1 Plug in the USB cable.

2 Plug in the MSB cable.

3 Plug in the mains cable.

4 Mount the drainage tubings again *(see manual of the IC instrument)*.

Possibly, a longer section of silicone tubing (6.1816.020) must be cut to fit and mounted *(see also the manual for the IC instrument)*.

5 If one of the instruments in the stack is equipped with a leak sensor connection socket, connect the leak sensor *(see manual of the IC instrument)*.

3.4 Capillary connections in the IC system

This chapter contains general information concerning the capillary connections in the IC instruments and systems.

Generally speaking, capillary connections between two components of an IC system are made up of one connection capillary and two pressure screws with which the capillary is connected to the respective components.

Pressure screws

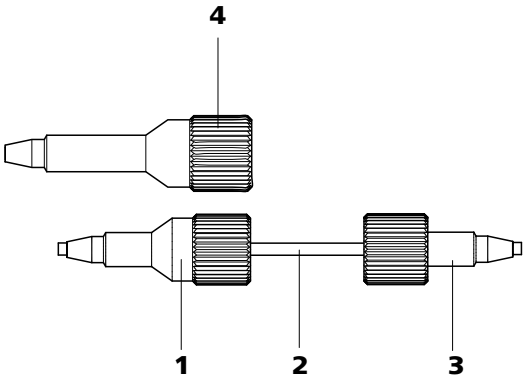

Figure 4 Connection of capillaries with pressure screws

1 **PEEK pressure screw (6.2744.014)** Use on the injection valve.	**2** **Connection capillary**
3 **PEEK pressure screw, short (6.2744.070)** For use on the high pressure pump, the purge valve, the inline filter, the pulsation absorber, the guard column and the separation column.	**4** **PEEK pressure screw, long (6.2744.090)** Use on special components. Is not used on all instruments.

NOTICE

In order to keep the dead volume as low as possible, capillary connections should generally be as short as possible.

NOTICE

For an improved overview, capillary and tubing connections can be bundled with the 6.1815.010 spiral band.

Connection capillaries

PEEK capillaries and PTFE capillaries are used in the IC system.

PEEK capillaries (polyetheretherketone)

PEEK capillaries are temperature-resistant up to 100°C, stable under pressure up to 400 bar, flexible, chemically inert and exhibit an extremely smooth surface. They can be readily cut down to the desired length with the 6.2621.080 capillary cutter.

Usage:

- PEEK capillaries (6.1831.010) with an internal diameter of 0.25 mm for the entire high-pressure section.
- PEEK capillaries (6.1831.030) with an internal diameter of 0.75 mm for sample handling in the ultratrace range.

PTFE capillaries (polytetrafluoroethylene)

PTFE capillaries are transparent and enable visual tracing of the liquids to be pumped. They are chemically inert, flexible and temperature-resistant up to 80°C.

Usage:

PTFE capillaries (6.1803.0x0) are used for the low-pressure section.

- PTFE capillaries with internal diameter of 0.5 mm for sample handling.
- PTFE capillaries with internal diameter of 0.97 mm for sample handling as well as for rinsing solutions (they do not have to be in the scope of delivery of the instrument).

Capillary connections

In order to achieve optimum analysis results, capillary connections in an IC system must be absolutely tight and free of dead volume. Dead volume occurs if two capillary ends connected to each other do not fit exactly, thus allowing liquid to escape. There are two possible reasons for this:

- The capillaries do not have exactly cut edges.
- The two capillary ends do not completely meet.

One prerequisite for dead volume free capillary connection is, that both capillary ends are cut exactly plane. Therefore we recommend only to cut PEEK capillaries with the capillary cutter (6.2621.080).

Creating dead volume free capillary connections

To create dead volume free capillary connections, proceed as follows:

1. Slide the pressure screw over the capillary. Ensure that the capillary protrudes 1–2 mm from the tip of the pressure screw.

2 Plug the capillary all the way into the connection or coupling until the stop.

3 Only then start turning the pressure screw, while keeping the capillary pressed in space.

Colored sleeves for PEEK capillaries

The enclosed set of varicolored sleeves for PEEK capillaries (6.2251.000) serves to easily differentiate the various flows of liquid in the system through color coding. Each capillary leading a given liquid (e. g. eluent) can be highlighted with sleeves of the same color.

To highlight a capillary, proceed as follows:

1 Slide a sleeve of a selected color over a capillary an move it to an easily visible position.

If the capillary heats up, the sleeve shrinks and adapts to the form of the capillary.

3.5 Installing the flow-through cell

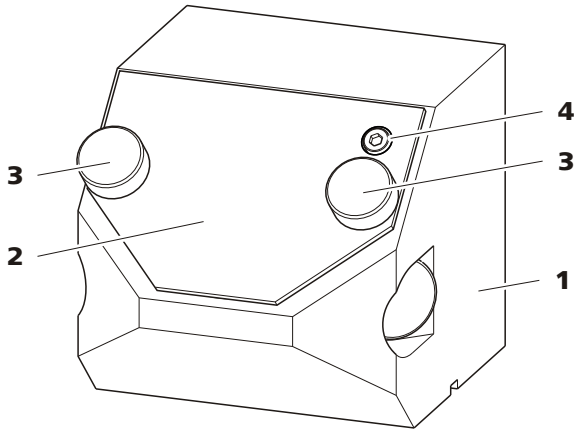

Figure 5 Cell block

1	**Cell holder** Holder for the flow-through cell.	2	**Covering plate** Protects the cell holder form contamination if no cell is installed.
3	**Knurled screws**	4	**Cylinder screw** For correct alignment of the flow-through cell

Installing the flow-through cell

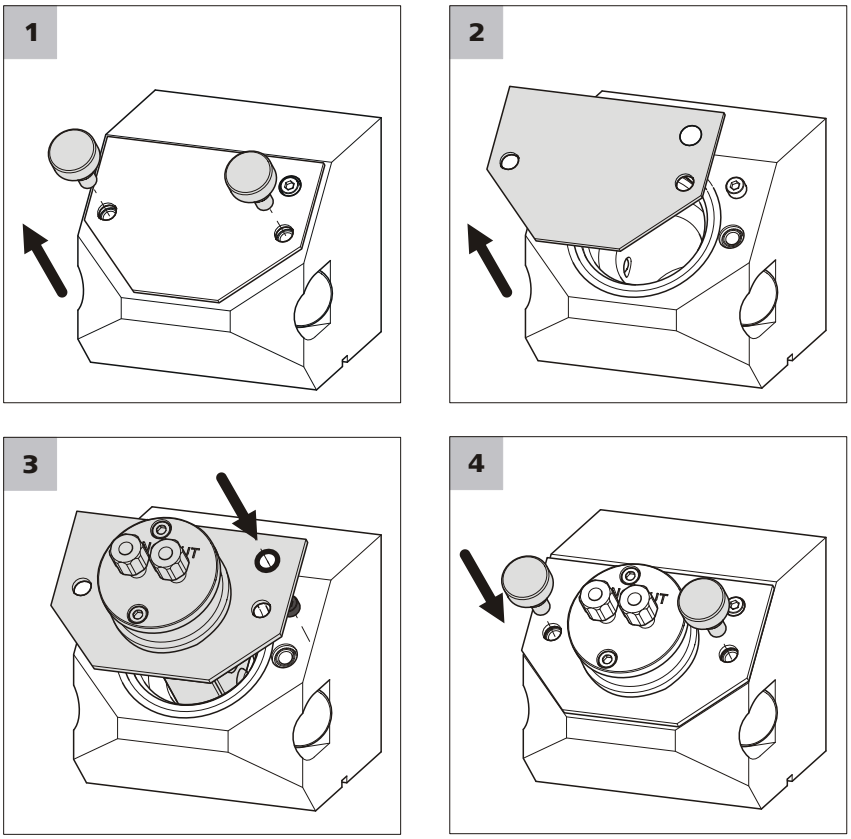

1 Loosen knurled screws *(5-**3**)* and remove.

2 Remove covering plate *(5-**2**)*.

3 Insert the flow-through cell (6.2839.130) aligning the opening at the top right corner to the cylinder screw *(5-**4**)* on the cell block.

4 Tighten knurled screws again.

NOTICE

In order to fix the flow-through cell in the correct position, both knurled screws must be tightened symmetrically and with constant force.

Any tilting, twisting or canting of the flow-through cell influences the light incidence and thus the measuring results.

3.6 Connecting the flow-through cell

To connect the capillaries to the flow-through cell, proceed as follows:

Connecting the capillaries

1 Connecting detector input

- Unscrew the pressure screw form the detector inlet *IN*.
- Slide the pressure screw over the detector inlet capillary such that a small part of the capillary is visible at the top.
- Screw the detector inlet capillary to the detector inlet with the pressure screw.

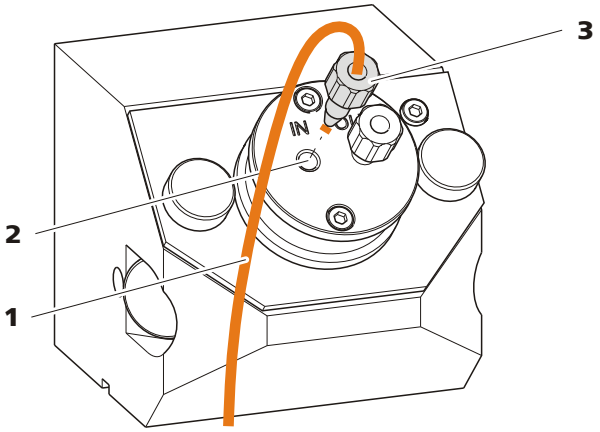

Figure 6 Connecting detector input

1 Detector inlet capillary PEEK capillary (6.1831.100)	**2 Detector inlet** Labeled with *IN*.
3 Pressure screw	

2 Connecting detector output

- Unscrew the pressure screw form the detector outlet *OUT*.
- Slide the pressure screw over the detector inlet capillary such that a small part of the capillary is visible at the top.
- Screw the detector outlet capillary to the detector outlet with the pressure screw.

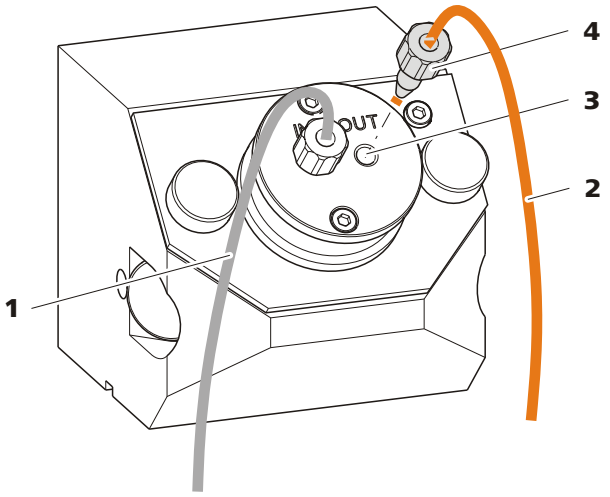

Figure 7 Connecting detector output

1	**Detector inlet capillary**	**2**	**Detector outlet capillary** PEEK capillary (6.1831.100)
3	**Detector outlet** Labeled with *OUT*.	**4**	**Pressure screw**

3.7 Connecting the instrument

3.7.1 Connecting the instrument to the PC

NOTICE

The instrument must be switched off when connecting the PC.

1 Connecting the USB cable

Connect the PC connection socket of the instrument to a USB connector of the computer via the 6.2151.020 USB cable.

3.7.2 Connecting the instrument to the power grid

WARNING

Electric shock from electrical potential

Risk of injury by touching live components or through moisture on live parts.

- Never open the housing of the instrument while the power cord is still connected.
- Protect live parts (e.g. power supply unit, power cord, connection sockets) against moisture.
- Unplug the power plug immediately if you suspect that moisture has gotten inside the instrument.
- Only personnel who have been issued Metrohm qualifications may perform service and repair work on electrical and electronic parts.

Connecting the power cord

Accessories

Power cord with the following specifications:

- Length: max. 2 m
- Number of cores: 3, with protective conductor
- Instrument plug: IEC 60320 type C13
- Conductor cross-section 3x min. 0.75 mm^2 / 18 AWG
- Power plug:
  - according to customer requirement (6.2122.XX0)
  - min. 10 A

NOTICE

Do not use a not permitted power cord!

1 Plugging in the power cord

- Plug the power cord into the instrument's power socket.
- Connect the power cord to the power grid.

4 Start-up

The 887 Professional UV/VIS Detector is set up together wit other instruments, e.g. an 850 Professional IC and the 886 Professional Thermostat/ Reactor.

Putting the 887 Professional UV/VIS Detector into operation

1 Start MagIC Net.

2 Switch the 887 Professional UV/VIS Detector on.

The 887 Professional UV/VIS Detector is recognized automatically by MagIC Net.

Evaluating the intensity spectrum

Before you can evaluate the intensity of the lamps, the following preconditions must be met:

- The lenses and the flow path of the flow-through cell must be clean.

1 **Rinsing the flow-through cell with ultrapure water**

Rinse the flow-through cell with ultrapure water at a flow of 0.5 mL/min.

Ensure that no air bubbles remain in the flow-through cell.

2 **Evaluating the intensity of the lamps**

In MagIC Net™, adjust the following settings:

- Go to program part **Manual**.
- Click on the symbol of the **887 UV/VIS Detector**.
- On the **UV lamp** tab, switch on the UV Lamp.
- On the **VIS lamp** tab, switch on the VIS lamp.
- On the **Detector** tab, select the **Intensity spectrum**.
  First click on **[Reset baseline]** and then click on **[View]**.

The lamps intensity range is monitored an a new spectrum is recorded.

If the intensity spectrum looks similar to the spectrum in *Figure 8*, then the lamp is correctly adjusted.

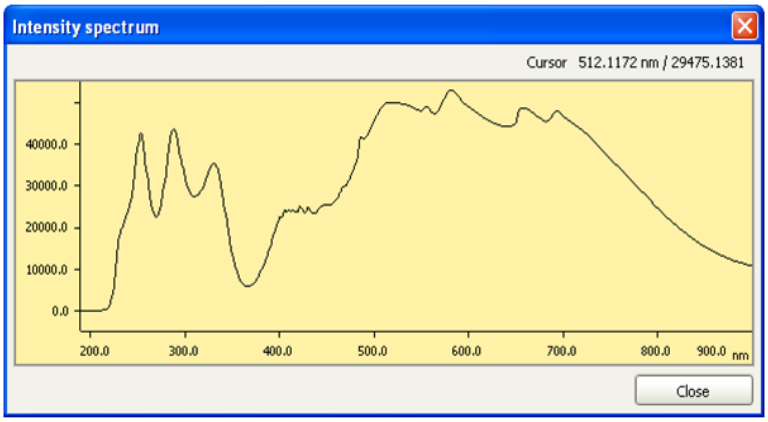

Figure 8 Intensity spectrum ok

If the intensity spectrum is cut off like the one in *figure 9*, then the lamp settings must be adjusted *(see chapter 6.5, page 30)*.

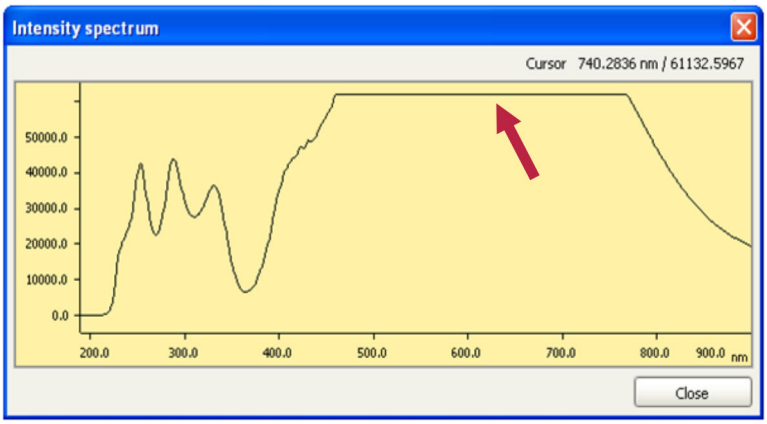

Figure 9 Intensity spectrum too high

5 Operation

The instrument is operated via MagIC Net™ software only. Additional information on operating MagIC Net™ can be found in the document *"Tutorial for MagIC Net™"* or in the online help.

6 Operation and maintenance

6.1 General notes

6.1.1 Care

WARNING

The instrument housing must not be opened by untrained personnel.

The instrument requires appropriate care. Excess contamination of the instrument may result in functional disruptions and a reduction in the service life of the sturdy mechanics and electronics.

CAUTION

Although this is prevented to a great extent by design measures, the mains plug should be unplugged immediately if aggressive media has penetrated the inside of the instrument, so as to avoid serious damage to the instrument electronics. In such cases, the Metrohm Service must be informed.

Spillages of chemicals and solvents should be cleaned up immediately. In particular, the plug connections on the rear panel of the instrument (especially the mains plug) should be protected from contamination.

6.1.2 Maintenance by Metrohm Service

Maintenance of the instrument is best carried out as part of an annual service, which is performed by specialist personnel from Metrohm. If working frequently with caustic and corrosive chemicals, a shorter maintenance interval is recommended. The Metrohm service department offers every form of technical advice for maintenance and service of all Metrohm instruments.

6.1.3 Operation

CAUTION

In order to avoid disturbing temperature influences, the entire system including the eluent bottle must be protected against direct sunlight.

6.1.4 Shutting down

If the instrument is not used for a longer period, the whole IC system (except the columns) must be rinsed salt free with methanol/ultrapure water (1:4), in order to prevent eluent salts and reagents from forming crystals which may cause subsequent damage.

Rinsing salt free the IC system

To rinse the system, proceed as follows:

1. Remove the separation column from the eluent path. Connect the connection capillaries directly with each other using a coupling (6.2744.040).

2. Rinse the IC system with methanol/ultrapure water (1:4) for 15 minutes.

Rinse with eluent for at least 15 minutes at starting up again and before connecting the guard column and separation column.

6.2 Door

CAUTION

The door is made of PMMA (poly(methyl methacrylate)). It must never be cleaned with abrasive media or solvents.

CAUTION

Never hold the instrument by the door when lifting or moving it.

6.3 Replacing the UV lamp

After a certain burning time, the radiation of the UV lamp starts to decrease, which can be noticed by an increased noise on the baseline. Check the effective burning time on the operating hours counter fixed to the cable of the lamp. This counter measures the effective hours of operation and displays them on a scale.

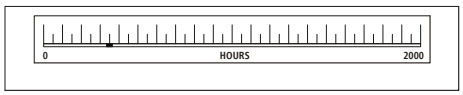

Figure 10 Operating hours counter

The UV lamp must be replaced if the noise on the baseline becomes too strong or when the lamp does not ignite.

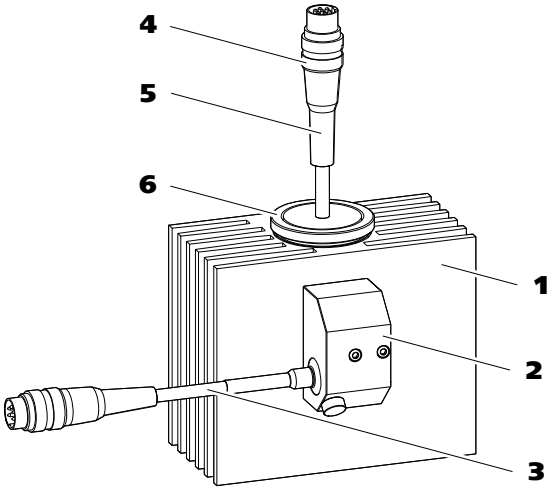

Figure 11 Lamp module

1	**Lamp cooling element**	**2**	**VIS lamp holder**
3	**VIS lamp** Halogen lamp (6.2804.100)	**4**	**UV lamp** Deuterium-Lamp (6.2804.060) with operating hours counter.
5	**Fastening ring** For UV lamp.		

To replace the UV lamp, proceed as follows:

Removing old UV lamp

WARNING

After longer operation, the UV lamp becomes hot!

Risk of burns!

Switch off the instrument and allow the lamp to cool before you start working.

Switch off the instrument, before replacing the lamp.

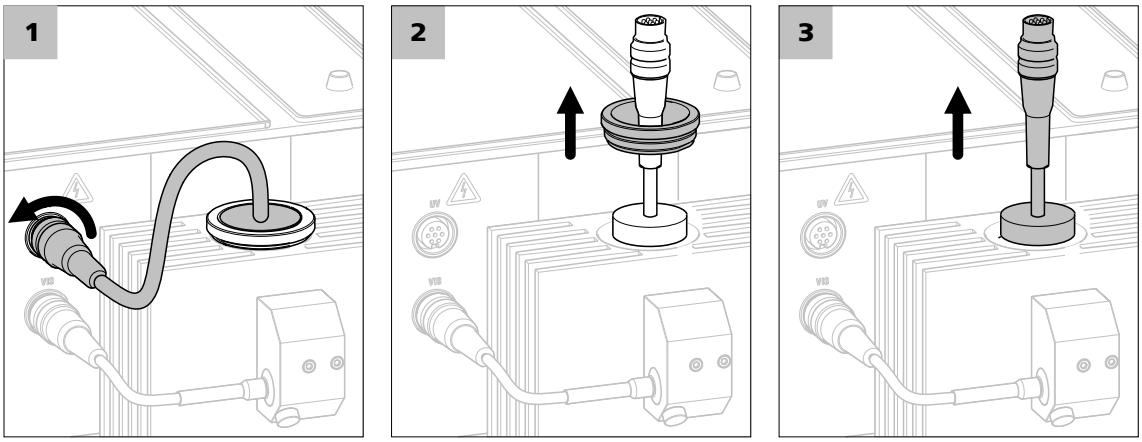

1 Disconnecting the UV lamp

Loosen the retaining ring of the UV lamp plug and pull the plug out of the *UV* connection socket.

2 Loosening the fastening ring

Loosen and remove the fastening ring of the UV lamp.

3 Removing UV lamp

Carefully remove the old UV lamp from its housing.

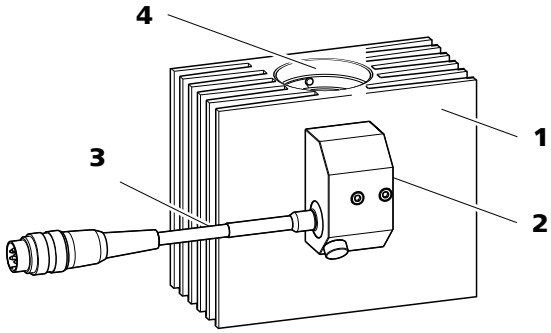

Figure 12 Lamp module – without UV lamp

1	**Lamp cooling element**	**2**	**VIS lamp holder**
3	**VIS lamp**	**4**	**Opening** For UV lamp.

Inserting new UV lamp

CAUTION

Avoid touching the lamp surface!

Residues diminish light transmission. In addition, they can burn into the glass and permanently damage the lamp.

Clean the lamps surface with alcohol, if it is stained, before reinserting it.

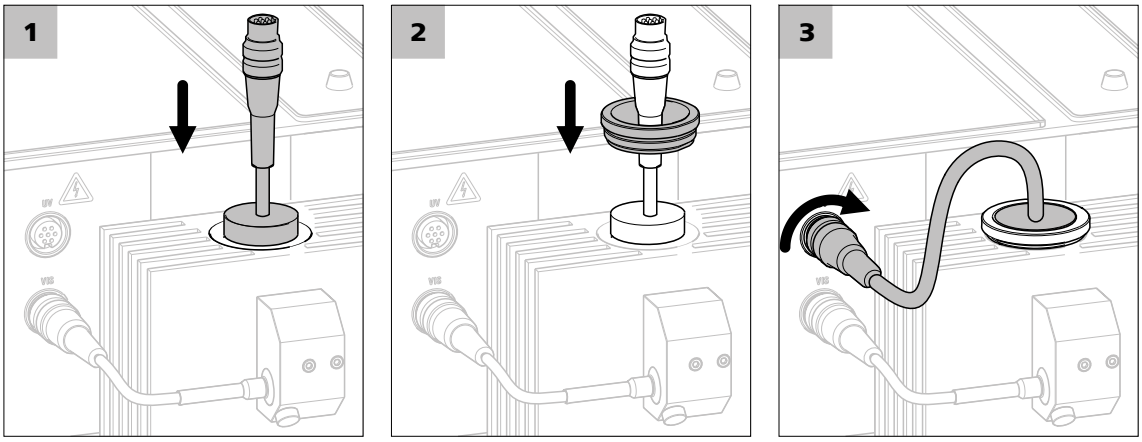

1 Inserting the UV lamp

Inset the new UV lamp (6.2804.060) into the opening for the UV lamp on the cooling element.

Align the groove on the lamp socket with the bolt in the opening for the UV lamp.

2 Fastening UV lamp

Slide the fastening ring over the cable of the UV Lamp and screw it to the lamp cooling element.

3 Connecting the UV lamp

Plug in the plug of the UV Lamp into the connection socket *UV* of the instrument and secure it with the fastening ring.

6.4 Replacing the VIS Lamp

NOTICE

A description on how to replace the VIS lamp (6.2804.100) can be found on the leaflet supplied with the VIS-lamp.

6.5 Adjusting the lamp settings

The lamp settings are set correctly at delivery.

CAUTION

The lamp settings **must not** be adjusted except in the following cases:

- After first start up, if the the check of the intensity spectrum shows a cut-off *(see chapter 4, page 22)*.
- After having exchanged the UV lamp *(see chapter 6.3, page 27)* or the VIS lamp *(see chapter 6.4, page 30)*, if the check of the intensity spectrum shows a cut-off *(see chapter 4, page 22)*.

Before each adjustment of the lamp values, it is **mandatory** to check the intensity spectrum. The lamp settings may only be adjusted if the intensity spectrum is cut off at the top.

Adjusting the lamp settings

Before you can adjust the lamp settings, **all** the following preconditions must be unconditionally met:

- The UV lamp is burning for at least 30 minutes.
- The flow-through cell is clean.

- The flow-through cell is rinsed with ultrapure water.
- The flow-through cell is free of air bubbles.
- The intensity spectrum has been checked and shows a cut-off *(see chapter 4, page 22)*.

1 Starting automatic lamp setting

- In MagIC Net™, go to the program part **Configuration** and select the **887 UV/VIS Detector** from the device table.
- Click **Edit ▸ Properties...** to open the properties window.
- On the **Detector** tab, click on **[Properties...]** to open the detector settings.
- In the detector settings, click on **[Adjust automatically]** to start the automatic lamp adjustment.

The lamp settings are optimized based on a built in algorithm. This algorithm calculates and sets the optimized values for **Integration duration** and **VIS intensity level**. After the automatic adjustment, a new intensity spectrum is displayed.

2 Saving the lamp settings

- Evaluate the new intensity spectrum and click on **[OK]** to complete the lamp adjustments.

The adjusted values are transferred to the instrument. The dialog window is closed.

6.6 Cleaning the flow-through cell

Depending on the application, hardly visible deposits may form on the lenses, which leads to higher absorption and thus increasing noise on the baseline.

If the baseline is very noisy and the problem is not caused by other parts of the system, the flow-through cell must be cleaned.

For the cleaning of the flow-through cell, we recommend a three step process:

1. Rinse the flow-through cell with methanol.
2. Rinsing the flow-through cell with another solvent.
3. Dismantling and cleaning the flow-through cell manually.

Always start the cleaning process with step 1. If this does not solve the problem, perform step 2. Perform step 3 only, if the deposits are persistent.

Rinsing the flow-through cell with methanol

1 Disconnect the inlet capillary from the IC system.

2 Connect the inlet capillary to a high pressure pump or a peristaltic pump and rinse the flow-through cell as follows – ensure that the maximum pressure of 5 MPa is not exceeded:

- first, rinse with ultrapure water to avoid precipitation,
- then, rinse several minutes with methanol, to dissolve the deposits, and
- finally, rinse another 15 minutes with ultrapure water, to wash away the dissolved deposits.

3 Observe the baseline during the last rinsing step.

If the baseline remains flat, the flow-through cell is clean.

If the noise persists, rinse the flow-through cell once again with another solvent *(see "Rinsing the flow-through cell with another solvent", page 32)*.

Rinsing the flow-through cell with another solvent

A solvent made up of a 1:2 mixture of acetic acid and isopropanol has shown good results. Depending on the application, other solvents may also prove efficient.

Preconditions:

- Rinsing with methanol was inefficient.
- The inlet capillary is connected to a high pressure pump or a peristaltic pump.

1 Rinse the flow-through cell as follows – ensure that the maximum pressure of 5MPa is not exceeded:

- first, rinse with ultrapure water to avoid precipitation,
- then, rinse several minutes with the selected solvent to dissolve the deposits, and
- finally, rinse another 15 minutes with ultrapure water to wash away the dissolved deposits.

2 Observe the baseline during the last rinsing step.

If the baseline remains flat, the flow-through cell is clean.

If the noise persists, the flow-through cell must be dismantled and cleaned manually *(see "Dismantling and cleaning the flow-through cell", page 33)*.

Dismantling and cleaning the flow-through cell

NOTICE

Ex works, the retaining screws are tightened with a torque wrench. This guarantees a pressure stability up to 5MPa (50bar).

Once the flow-through cell has been opened and closed again, this maximum pressure stability can no longer be guaranteed.

Preconditions:

- Rinsing the flow-through cell with solvent was inefficient.

Required tools:

- To open the measuring cell, you need a slotted screwdriver size 5.
- Seals from seal set 6.2764.000

1 Removing the flow-through cell

- Disconnect inlet capillary and outlet capillary,
- Loosen the knurled screws and remove them,
- Remove the flow-through cell from the cell holder.

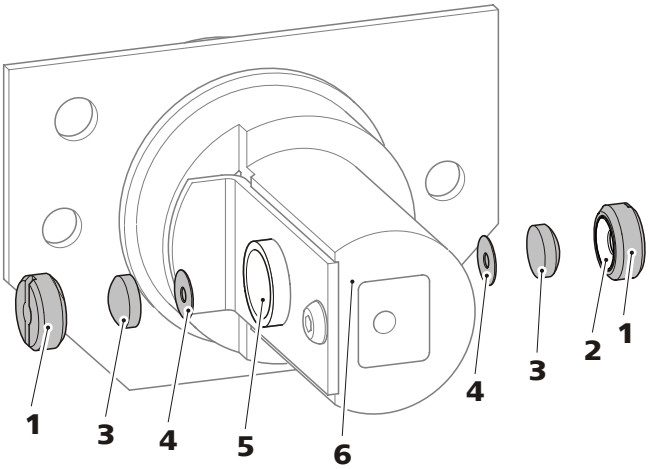

Figure 13 Flow-through cell – parts

1	**Retaining screw**	**2**	**Outer seal**

3	**Lens**	**4**	**Inner seal**
5	**Measuring cell – opening**	**6**	**Cell holder**

2 Removing the lens

- Loosen the retaining screw *(13-**1**)* with a slotted screwdriver size 5 and remove it.
  Remove the seal from the inside of the retaining screw *(13-**2**)*.
- Carefully remove the lens *(13-**3**)* and the inner seal *(13-**4**)* from the measuring cell.
- Put the lens onto a white paper, this allows you to see possible deposits.

3 Cleaning the lens

- Clean the lens with ultrapure water, methanol or another suitable solvent (depending on the application) and wipe with a lint-free cloth.
- Rinse again with ultrapure water and dry with a lint-free cloth.

4 Re-inserting the lens

- Insert a new inner seal *(13-**4**)* into the measuring cell, make sure that it lies flat and centered in the recess of the measuring cell.
- Insert the lens *(13-**3**)* with its flat side in into the measuring cell, make sure that it lies flat an centered in the recess of the measuring cell.
- Insert an new outer seal *(13-**2**)* into the retaining screw.
- Insert the retaining screw *(13-**1**)* and tighten it with a slotted screwdriver size 5.

5 Cleaning the second lens

Repeat steps 2 – 4 at the opposite side of the cell holder.

6 Re-inserting the flow-through cell

Follow steps 3 – 4 of *"Installing the flow-through cell", page 18.*

7 Troubleshooting

7.1 Problems and their solutions

Problem	Cause	Remedy
Marked drop in pressure.	*Leak in the system.*	Check all capillary connections and seal leaks, if necessary *(see chapter 3.4, page 15)*.
No measuring signal.	*Lamp not burning.*	Replace UV lamp *(see chapter 6.3, page 27)*.
The baseline has a large amount of noise.	*Flow-through cell – lens deposits.*	Cleaning the flow-through cell *(see chapter 6.6, page 31)*.
	Flow-through cell – air bubbles.	▪ Cleaning the flow-through cell *(see chapter 6.6, page 31)*. ▪ Ensure that the PEEK capillary (6.1831.100) is connected to the cell outlet. ▪ Use eluent degasser.
	UV lamp – radiation too weak.	Replace UV lamp *(see chapter 6.3, page 27)*.
	Eluent – absorption too strong.	Change the eluent.
	Wavelength inappropriate.	Change wavelength setting in MagIC Net.
The baseline is drifting.	*Leak in flow-through cell.*	Check connections and seal leak if necessary.
	Thermal equilibrium not yet attained.	Wait until constant temperature is reached in the system.
	Leak in the system.	Check all capillary connections and seal leaks, if necessary *(see chapter 3.4, page 15)*.
Extreme spread of the peaks in the chromatogram. Splitting (dual peaks)	*Capillary connections – dead volume in the system.*	Check connections *(see chapter 3.4, page 15)* (use PEEK capillaries with an internal diameter of 0.25 mm between the injection valve and detector).
Lamp does not ignite.	*Lamp defective.*	Replace UV lamp *(see chapter 6.3, page 27)*.

8 Technical specifications

8.1 Reference conditions

The technical specifications listed in this chapter refer to the following reference conditions:

Ambient temperature	+25 °C (±3 °C)
Instrument status	> 30 min in operation with both lamps switched on.

8.2 UV/VIS detector

Measuring range	
Absorption	–2.0 - +2.0 AU
Number of channels	8 measuring channels, 4 of them readable in analog mode
Resolution	2.5 x 10^{-7} AU
Noise	2.5 x 10^{-5} AU (at a 1/s data rate)
Drift	
at reference conditions	5 x 10^{-4} AU/h
Wavelength range	
Wavelength range λ	190 - 900 nm
Wavelength bunching (Δλ)	1 - limit nm (max. 101) limit is twice the maximum number of nm between the wavelength of the corresponding channel and the nearest wavelength border. Δλ is always odd, since symmetrical around the wavelength of the corresponding channel including the mean value.
Accuracy, absolute	±3 nm
Stability	±1 nm (across temperature range)
Optical resolution	5 nm (at 254 nm)
Measuring interval	
Data rate for each channel	0.5 - 50 samples/sec

Analog output

Voltage range	–1.0 - +1.0 V
Resolution	30 µV
Noise	< 30 µV
Output impedance	50 Ω (sustained short circuit-proof)
Offset error	±1.5 mV
Plug	9-pin DSUB plug (female)

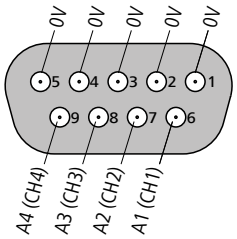

Control input

Input voltage range	0 - 5 V (5 V logic or switching contact control possible.)
Impedance	22 kΩ (permanent resistance up to 50 V. Secured against ESD.)
Function	Start, zero, 2x reserve Caution: If "Reserve 2" input is active when the instrument is switched on, the instrument enters long-term test mode, which switches through all elements following a time schedule and cannot be terminated, not even by power failure. Can only be terminated by service software or RS-232 commands.

8.3 Lamps

UV lamp

Type	D_2 (deuterium)
Power consumption	approx. 20 - 30 W
Service life	approx. 1,000 h

VIS lamp

Type	Halogen
Power consumption	approx. 5 W
Service life	approx. 10,000 h

8.4 Ambient conditions

Operation	
Ambient temperature	+5 - +45 °C
Humidity	20 - 80% relative humidity
Storage	
Ambient temperature	–20 - +70 °C
Transport	
Ambient temperature	–40 - +70 °C

8.5 Housing

Dimensions	
Width	370 mm
Height	131 mm
Depth	495 mm
Base tray, housing and bottle holder material	Polyurethane hard foam (PUR) with flame retardation for fire class UL94V0, CFC-free, coated
Controls	
Indicators	LED for standby indicator
On/off switch	On the rear of the instrument

8.6 Mains connection

Required voltage	100…240 V (±10%)
Required frequency	50…60 Hz
Power consumption	105 VA

9 Accessories

Up-to-date information on the scope of delivery and optional accessories for your product can be found on the Internet. You can download this information using the article number as follows:

Downloading the accessories list

1. Enter *https://www.metrohm.com/* into your Internet browser.
2. Enter the article number (e.g. **2.887.0010**) into the search field.

   The search result is displayed.
3. Click on the product.

   Detailed information regarding the product is shown on various tabs.
4. On the **Included parts** tab, click on **Download the PDF**.

   The PDF file with the accessories data is created.

NOTICE

Once you have received your new product, we recommend downloading the accessories list from the Internet, printing it out and keeping it together with the manual for reference purposes.

Index

A

Ambient conditions 38

B

Base tray
- Mount 11
- Remove 10

Bottle holder
- Mount 13
- Remove 12

C

Capillaries
- Installation 15

Cleaning
- Flow-through cell 31

Connect
- Power grid 21

Connections
- Installation 15

Connector
- Mains 38

D

Dimensions 38

Door 26

E

Electrostatic charge 4

F

flow-through cell 17
- Installing 18

Flow-through cell
- Cleaning 31
- Connecting 19

Frequency 38

H

Housing 38

Humidity 38

I

Installation
- Connections 15

Instrument
- Connecting 20

L

Lamp
- Adjust settings 30

Lamp settings
- Adjust 30

Lamps 37

M

Mains connection 38

Material 38

P

PC connector 20

Power connection 21

Power consumption 38

Pressure screws
- Connection 15

R

Reference conditions 36

Regeneration 25

S

Safety instructions 3

Screws
- Connection 15

Seal 34

Service 3, 25

Shutting down 26

Storage 38

Supply voltage 4

T

Technical specifications
- Ambient conditions 38
- Housing 38
- Lamps 37
- Reference conditions 36
- UV/VIS detector 36

Temperature 38

Transport 38

Tubings
- Installation 15

U

UV lamp
- Replacing 27

UV/VIS detector 36

V

VIS lamp
- Replacing 30

Voltage 38